ELECTRIC BOILERS FOR CENTRAL HEATING

Thermo Max

INSTRUCTIONS FOR INSTALLATION

DAMAGES CAUSED BY FAILURE TO OBSERVE THESE INSTRUCTIONS ARE NOT OUR LIABILITY

Safety information and warnings

Read this document carefully before manipulation, any installation, setup, or service, and follow the instructions

- **Keep these instructions in the vicinity of the boiler!**
- **You cannot modify the boiler.**
- **Adjusting correctly is important for economical heating.**
- **A number printed on the boiler's identification label is used for every interaction with the manufacturer or authorised servicing call to the factory.**

Children in the household!!!

- Please supervise children who are in the vicinity of the device. Do not allow children to play with the device.
- Cleaning and maintenance tasks may not be completed by children.
- The boiler is not intended for installation in the open air.

Technical security!!

- Keep the water pressure in the boiler according to the manufacturer's recommendations-see section 3.2.
- Do not mount the boiler in the vicinity of sources of heat (open fireplace, wood stove, etc.).
- Improper repairs can cause a serious danger to the safety of the user.
- Defective parts may be replaced only with original or approved by the manufacturer.
- Turn off the main power before opening or any work on the boiler.
- The boiler has built-in protection against frost damage. When the boiler is not in use during the winter, the main power should be kept on (the boiler can be turned off via the control panel to ensure that the protection is in place).

Please note it is necessary to carry out initial maintenance of the contacts due to the possibility of their loosening during the transport of the device.

(see page 50 for full details)

Contents

1. Introduction 5
1.1. Applicable documents 5
1.2. Retention of documents 5
1.3. Introduction 5
1.4. Heating curves 5
1.4.1. Availability of heating curves 5
1.4.2. About Heating curves 5
1.4.3. Why does the characteristic heating curve have to be set? 6
1.4.4. Corrections of the room temperature 6
1.4.5. Limiting the minimum and maximum temperature of water in the boiler 7
1.5. Frost protection 7
2. Boiler specifications 8
2.1. Hydraulic pressure drop 8
2.2. Dimensions 9
2.3. Technical data for Thermo Max boilers 11
2.4. Power stages 11
2.5. Nominal current per phase 12
2.6. The boiler flow requirements 12
2.7. Filling the heating system – Water quality 14
3. General requirements 14
3.1. Contents included in delivery 14
3.2. Preliminary remarks 15
3.3. Installation site 16
3.3.1. Position of the boiler 16
3.4. System requirements 16
3.4.1. Pipe work 16
3.4.2. Cleansing and flushing the system 16
3.4.3. Filling and preparing heating system 16
3.4.4. Pressure relief valve 17
4. Boiler installation sequence 17
4.1. Select position for boiler 17
4.2. Power supply connection 18
4.3. Cables and connection points for Thermo Max boilers 18
4.3.1. Cable Entry 18
4.3.2. Cable Connections within the boiler 19
4.4. Connecting temperature sensors or external electrical controls 21
4.4.1. Accessing connection terminals 21
4.4.2. Connecting external temperature sensor 21
4.4.3. Connecting room thermostat and time switch 22
4.5. Connecting external alarm and display of power/stage control 22

4.5.1. External alarm connection 22
4.5.2. Connection for external display of power/stage 22
4.6. Connecting boilers in cascade 22
5. Commissioning 23
5.1. Central heating system check 23
5.2. Preliminary electrical check 23
6. Working with control panel 23
6.1. "X" Control panel information 23
6.2. Introduction to control panel 24
6.3. Control panel display 25
6.4. Entering and navigating through the user menu 25
6.5. User menu options 26
6.6. Example of changing the date and time 27
6.7. Selecting the desired boiler temperature 27
6.8. Offsetting heating curve 28
6.9. Connecting the control panel to the network 29
7. Connecting module 37
7.1. Connecting module layout 37
7.2. Outdoor temperature sensor connection 38
7.3. Connecting the sensor for DHW tank 39
7.4. Connection of signals for remote control via analogue inputs 40
7.5. Contacts connection remote MCB shutdown 41
7.6. Connecting pressure switches or other protective devices 43
7.7. Maximum power signal 44
7.8. Alarm 45
8. Maintenance 46
8.1. Periodic checking 46
8.2. Cleaning 46
9. Troubleshooting 47
10. EU Declaration of Conformity 49
11. Commissioning and Maintenance 50
11.1 Torquing specification 51
11.2 Commissioning details 52
11.3 Maintenance record sheets 53-57

1. Introduction

Thank you for purchasing our central heating boiler. Before proceeding with installation, carefully read these instructions to ensure appropriate, safe, and most importantly, cost-effective usage of the boiler.

The appliances must be installed by a suitably trained professional, who is responsible for adhering to the existing regulations, rules and guidelines.

1.1. Applicable documents

The following additional documents are provided with the appliance:

For the owner of the system:
Instructions for use
Warranty card

For the qualified technician:
Instructions for installation
Electrical drawing for the appliance

1.2. Retention of documents

Please pass on this installation manual to the owner of the system. The owner should retain the manuals so that they are available when required.

1.3. Introduction

Thermo Max is economical central heating boilers that may be used as an independent or additional source of heat.
Thermo Max boilers offer you the possibility to reduce the power of the heater if necessary. The power is switched on automatically, when necessary, with built-in 7,15 or 30 power output steps. You have the possibility to reduce maximum power using the boiler control panel. In this way, it is possible to adapt the boiler to your required specification when you need it (e.g. turning the heat up or down). The boiler operates on a principle of rapidly heating smaller quantities of water, so energy efficiency is already 100%.

1.4. Heating curves

1.4.1. Availability of heating curves

Use of heating curves, outside temperature compensation can be achieved with option *O* control panel.

1.4.2. About Heating curves

The modern way of heating is based on energy saving and automatic adjustments to warm up the space. To achieve the required temperature, an electric boiler with electronic control panel heats the water in the boiler automatically depending on the external temperature. There is no need to look after the minimal working temperature because electric boilers do not dew and that means that the temperature of the water in the boiler is at the same time the temperature in the heating elements (for example in radiators, convectors etc.).
To achieve the desired room temperature, the characteristic heating curve must be chosen depending on the characteristics of the building and the heating system.

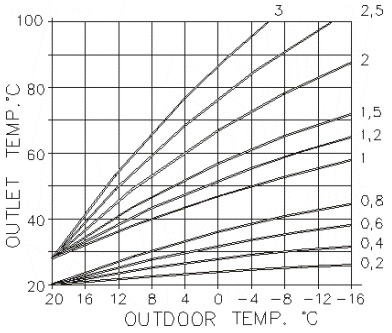

Factory defined curves

If the heating curve is set optimally for heating of your apartment or house, corrections will not be necessary.

1.4.3. Why does the characteristic heating curve have to be set?

After setting up the heating curve the first time, an authorized person can adjust and correct the curve if necessary. Every heating room is built up differently. Different heating elements and heating systems can be used (radiators, under floor or combined heating) and every building has a different thermal insulation.
For the maximum exploitation of the heating and maximum energy savings, characteristic heating curve must be set using the parameter on the control panel, in a way that the chosen heating curve is suitable for the heating system and for the quality of the building.

1.4.4. Corrections of the room temperature

Based on experience, factory settings of the device are for the average insulated object and room temperature of 22°C. If factory settings are not adequate for achieving the desired room temperature, supplemental adjustments of the standard heating curves can be made.

Changing the inclination

When changing the heating curve, inclination is changing too, and in that way, the temperature of water in the boiler changes when the external temperature is low (below 5°C).

Level changes - offset

By offsetting the heating curve for the chosen value. The temperature of water in the boiler is changing without changing the shape of the curve.
The values in the table below are used for the orientation and the user can change them any time as they wish to.

Experience has shown the following (for the average building quality):
when the temperature of water for heating changes from 5 to 7°C that will change the room temperature by approximately 2°C.

Thermal (heating) processes are slow, all corrections function after a period of time. It would be better if further corrections were made a day or two later.

To gain experience, we suggest that you should write all corrections (within a period of searching for the right parameters) in the *protocol of the corrections*.

In the table below you can find instructions on how to correct the heating curve for the radiator heating depending on the achieved room temperature

	Inclination of the curve	Offset
Factory settings	**1,5**	**0**
Room temperature is too low if the external temperature is **above + 5°C**	Change with the first lower curve	Add with offset + 6°C
Room temperature is too low if the external temperature is **between + 5°C and - 5°C**	Leave the curve 1,5	Add with offset + 3°C
Room temperature is too low if the external temperature is **below - 5°C**	Change with the first higher curve	Leave offset 0°C
Room temperature is too high if the external temperature is **above + 5°C**	Change with the first higher curve	Lower with offset - 6°C
Room temperature is too high if the external temperature is **between + 5°C - 5°C**	Leave the curve 1,5	Lower with offset - 3°C
Room temperature is too high if the external temperature is **below - 5°C**	Change with the first lower curve	Leave offset 0°C

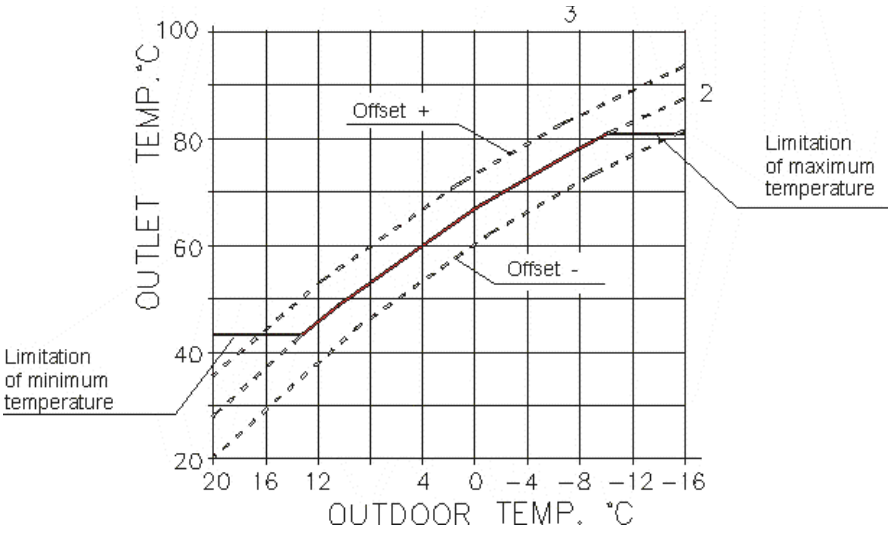

Sample of modified curve

In a combined heating system, radiator and under floor heating, or other heating elements, the temperature of water in the boiler must be chosen in a way to achieve the highest desired temperature. On the parts of heating where the temperature of the primary flow must be lower, one element must be built in such as motorized three-way valve that is controlled by room thermostat, thermostat valve for limiting the temperature of the return flow or something similar.

1.4.5. Limiting the minimum and maximum temperature of water in the boiler

If the heating curves and offset are selected correctly and the room temperature is falling, *in transitional period in heating seasons (*fall, spring) minimal temperature of water in the boiler must be changed.
If a building cannot accumulate heat (sudden and short warming during the day) the necessary temperature of water in the boiler will be too low and will not keep up the desired room temperature.

Limitation of the maximum temperature of water in the boiler serves more as protection. Factory setting is at 90°C, and we suggest lowering it at approximately 80°C. Limitation of the maximum temperature of water in the boiler is also used in central heating and domestic water preparation system, and because of that it is not advisable to lower the temperature too much because the domestic water will warm up slowly on higher temperatures.

1.5. Frost protection

Frost protection, as boiler's function, is standard for Thermo Max boilers. When frost protection is controlled by room thermostat please consult room thermostat manuals for more details.

If the boiler is on for supply and heating or both (heating and warm water conditioning) are off, the protection from freezing of water in the central heating system switches automatically on if the water temperature sensor in the boiler reads the value below 8°C. In this case the temperature of water in the boiler is maintained at 8°C, until the conditions of possible freezing disappear. Switching on is signaled by appropriate symbol on control panel.
In order for the freezing protection system of central heating to operate, the room thermostat should be in the position of freezing protection, too (otherwise, the circulation pump of central heating would not operate).

2. Boiler specifications

2.1. Hydraulic pressure drop

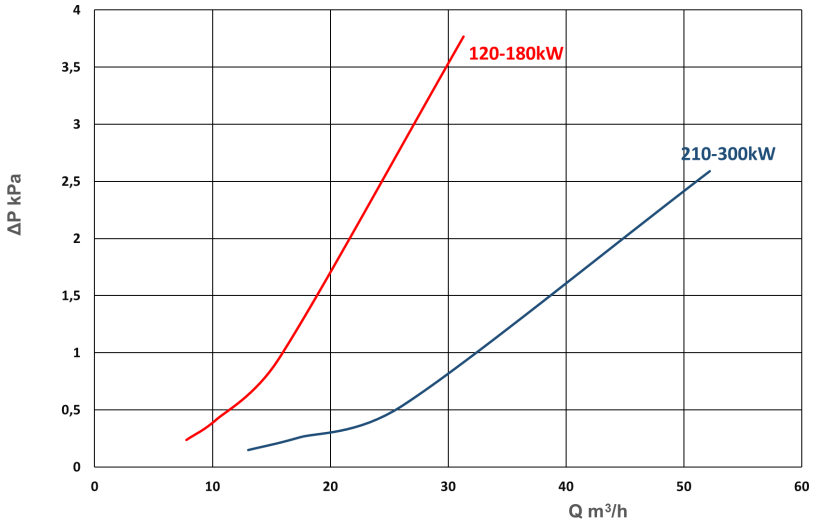

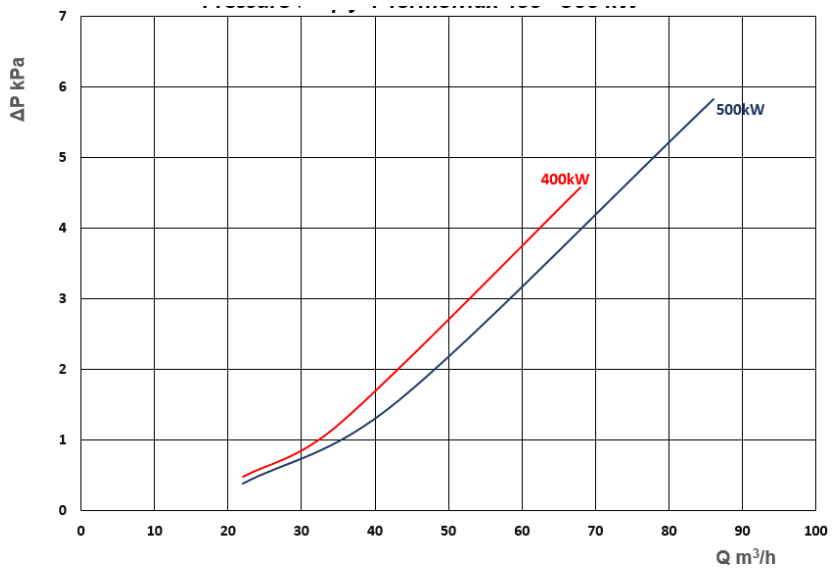

2.2. Dimensions

Thermo Max 120-300kW

	A mm	*A1 mm*	*B mm*	*B1 mm*	*C mm*	*C1 mm*	*D mm*	*D1 mm*
ThermoMax 120-180 kW	743	-	305	-	80	-	200	-
ThermoMax 210-300 kW	-	1033	-	530	-	125	-	245

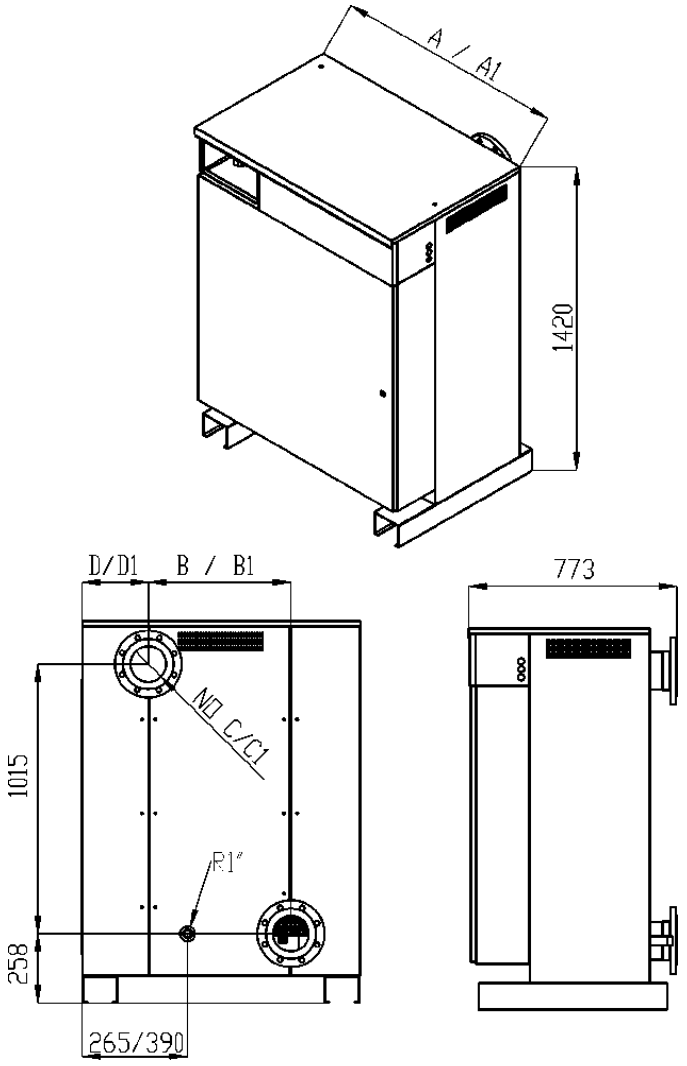

Thermo Max 400-500kW

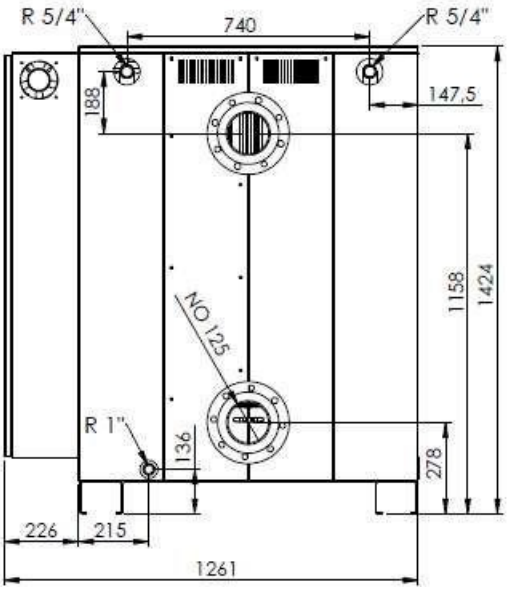

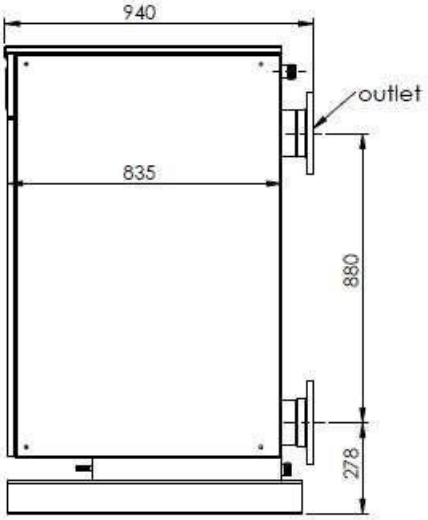

2.3. Technical data for Thermo Max Boilers

Model	120	150	180	210	255	300	400	500
Power	120 kW	150 kW	180 kW	210 kW	255 kW	300 kW	400 kW	500 kW
Fuse (A)	3 x 200	3 x 250	3 x 315	3 x 350	3 x 400	3 x 500	3 x 630	3 x 800
Power circuit	3 x 400 V							
Control circuit	230 V - 50/60 Hz - **a separate single phase supply is required**							
Heating elements No x kW	8 x 15	10 x 15	12 x 15	13x12 + 7x7,8	5x15 + 15x12	20 x 15	25x15 + 2x12	31x15 + 3x12
Water capacity	95 lit.			145 lit.			280 lit.	
Max. working pressure	6 bars							
Max. working temperature	90 °C							
Hydraulic pressure drop	Refer to chapter *2.1 Hydraulic pressure drop* for more details							
Pipe connection	Flange DN 80, NP16			Flange DN 125, NP16			Flange DN 125, NP16	
Height	1420 mm			1420 mm			1424 mm	
Width	743 mm			1033 mm			1261 mm	
Depth	780 mm			780 mm			940 mm	
Weight empty (kg)	274	289	297	366	386	396	630	665

2.4. Power Output Stages

Model kW	ThermoMax 120 - 180			ThermoMax 210 - 300			ThermoMax 400 - 500	
	120 kW	150 kW	180 kW	210 kW	255 kW	300 kW	400 kW	500 kW
Stage1 [kW]	15	12	15	12	12	15	15	15
Stage2 [kW]	30	15	30	24	36	45	30	30
Stage3 [kW]	45	27	45	36	48	60	45	45
Stage4 [kW]	75	45	45	64	72	75	57	72
Stage5 [kW]	90	57	60	76	84	90	72	87
Stage6 [kW]	105	60	75	88	108	120	87	102
Stage7 [kW]	120	72	90	100	120	135	102	117
Stage8 [kW]		78	90	112	135	165	105	132
Stage9 [kW]		90	105	124	147	180	120	147
Stage10 [kW]		93	120	136	171	210	135	164
Stage11 [kW]		105	135	148	183	225	150	177
Stage12 [kW]		123	135	176	207	240	162	204
Stage13 [kW]		135	150	188	219	255	177	219
Stage14 [kW]		138	165	200	243	285	192	234
Stage15 [kW]		150	180	210	255	300	207	249
Stage16 [kW]							222	264
Stage17 [kW]							234	279
Stage18 [kW]							249	294
Stage19 [kW]							252	324
Stage20 [kW]							267	339
Stage21 [kW]							279	354
Stage22 [kW]							294	369
Stage23 [kW]							312	381
Stage24 [kW]							327	396
Stage25 [kW]							339	411
Stage26 [kW]							354	426
Stage27 [kW]							357	456
Stage28 [kW]							372	471
Stage29 [kW]							384	486
Stage30 [kW]							399	501

2.5. Nominal current Amps per phase on a three phase supply

Model kW	120	150	180	210	255	300	400	500
Power cable* mm^2	70	120	150	185	185	2x(120)	2x(185)	3x(150)
Stage1 [kW]	21.7	17.3	21.7	17.3	17.3	21.7	21.7	21.7
Stage2 [kW]	43.3	21.7	43.3	34.6	52.0	65.0	43.3	43.3
Stage3 [kW]	65.0	39.0	65.0	52.0	69.3	86.6	65.0	65.0
Stage4 [kW]	108.3	65.0	65.0	92.4	103.9	108.3	82.3	103.9
Stage5 [kW]	129.9	82.3	86.6	109.7	121.2	129.9	103.9	125.6
Stage6 [kW]	151.6	86.6	108.3	127.0	155.9	173.2	125.6	147.2
Stage7 [kW]	173.2	103.9	129.9	144.3	173.2	194.9	147.2	168.9
Stage8 [kW]		112.6	129.9	161.7	194.9	238.2	151.6	190.5
Stage9 [kW]		129.9	151.6	179.0	212.2	259.8	173.2	212.2
Stage10 [kW]		134.2	173.2	196.3	246.8	303.1	194.9	236.7
Stage11 [kW]		151.6	194.9	213.6	264.1	324.8	216.5	255.5
Stage12 [kW]		177.5	194.9	254.0	298.8	346.4	233.8	294.4
Stage13 [kW]		194.9	216.5	271.4	316.1	368.1	255.5	316.1
Stage14 [kW]		199.2	238.2	288.7	350.7	411.4	277.1	337.7
Stage15 [kW]		216.5	259.8	303.1	368.1	433.0	298.8	359.4
Stage16 [kW]							320.4	381.1
Stage17 [kW]							337.7	402.7
Stage18 [kW]							359.4	424.4
Stage19 [kW]							363.7	467.7
Stage20 [kW]							385.4	489.3
Stage21 [kW]							402.7	511.0
Stage22 [kW]							424.4	532.6
Stage23 [kW]							450.3	549.9
Stage24 [kW]							472.0	571.6
Stage25 [kW]							489.3	593.2
Stage26 [kW]							511.0	614.9
Stage27 [kW]							515.3	658.2
Stage28 [kW]							536.9	679.8
Stage29 [kW]							554.3	701.5
Stage30 [kW]							575.9	723.1

*Remark:
The power cables are sized depending on the type and current of the circuit breaker. The size of cable depends on the ambient temperature, the length, the wires duct, the environment etc....
The values above are given for information only for copper cables, ambient temperature 25 °C and length up to 10m. **In all the circumstances, the installation must be in accordance with the current IEE wiring regulations in force in the country in which the boiler is being installed**

2.6. The boiler flow requirements

The boiler must have a constant and adequate flow in order to work properly. The flow characteristics of the system must be sized to fall within specified limits.

If the flow through the boiler is too low, the following problems may be caused:

- The difference between the temperature setting and the actual temperature achieved in the boiler increases.
- Erratic regulation, which increases wear on the boiler contactors, with a consequent reduction in service life.

If the flow is too fast, the following problems may be caused:

- Vibrations in the immersion heaters, resulting in noise and reduced service life.
- Unnecessary wear to the system components.

Boiler flow rates

Flow rates for the boilers – should be based on a maximum Delta T of 20°C and a minimum Delta T of 5°C – we recommend a Delta T of 11°C as this is the ideal delta T, but the boiler will work with no issues with a delta T between a 5°C and 20°C.

Flow Rate in a Heating System – calculation example

A water circulating heating system delivers 230 kW with a temperature difference of 20°C. The volumetric flow can be calculated as:

q = (230 kW) / (4.2 kJ/kg °C) (1000 kg/m3) (20°C)) = 2.7 10 -3 m3 /s

The mass flow can be expressed as:

m = (230 kW) / (4.2 kJ/kg oC) (20 oC)) = 2.7 kg/s (kg/s is the same as litres/ second)

Please size your **pump to cover both the highest kW output and the lowest output from the boiler (see page 11 – section 2.3)**. We recommend using a variable speed pump to modulate the flow rate according to your desired Delta T.

For example, our 500kW boilers **maximum output is 501kW** – based on a Delta T of 20C, the pump must be able to produce -

5.96 litres a second = which is 21.456 m3/h at **full output**

And must be able to ramp down to the **minimum output of 30kW** for the 500kW boiler (see heating step modulation table in the manual) – thus

0.357 litres a second = which is 1.285 M3/hour at **lowest output**

If your system has **variable flow rates outside of these parameters**, then you will need to use a low loss header or a hydraulic separator plate heat exchanger, to make a primary and secondary heating circuit.

As **electric boilers are flow sensitive, and issues will arise if the flow rates can't be guaranteed directly through the boiler**. See point 2.5 on the previous page

2.7. Filling the heating system – Water quality

For the heating system to operate properly the indicator of manometer must be between 1.0 and 3.0 bar when the system is cold. It is very important to use soft water or liquid for central heating.

Water that is high quality from the point of view of hygiene is not necessarily suitable for use in a large heating system. To avoid the problems, the water should be analysed from a technical point of view, and any differences from standard values should be corrected. In such systems, an oxygen-demanding agent can be added so there is always a slight surplus in the system. These agents often contain anti-corrosive additives.

Water quality, based on suitable mains water:

- The Alkalinity should exceed 60 mg/l to avoid corrosion.
- Carbon dioxide contents exceeding 25 mg/l increase the risk of corrosion.
- Sulphate contents exceeding 100 mg/l may hasten corrosion, and if the sulphate content is higher than the alkalinity of copper corrosion.
- Hard water produces scale that is not suitable in heating systems.
- Very soft water can cause corrosion.
- Chloride contents exceeding 100 mg/l make the water aggressive, especially combined with lime scale.
- Low pH values can cause corrosion – the pH value should be between 7.5 – 8.5
- The occurrence of carbon dioxide combined with a low pH value and hardness value makes the water aggressive.

3. General requirements

3.1. Contents included in delivery

Thermo Max, boilers are delivered in a package unit. Make sure that all parts have been delivered intact. For the exact list of parts see the table below. If parts are damaged or missing, please consult our local sales office.

Quantity	Description
1	Thermo Max
1	Instructions for installation and use Electrical drawing Warranty card
1	External temperature sensor (optional)
1	Water cylinder temperature sensor (optional)

Table of contents included with delivery

3.2. Preliminary remarks

When connecting the appliance to the fixing wiring, the means for disconnection (circuit breaker) must be wired in accordance with the local wiring regulations.

A safety valve is not mounted on Thermo Max boilers at the factory. A safety valve with a 6-bar setting must be installed either on the boiler (see below), or on the system for overpressure protection.

"Pressure switches or a combined hi / low pressure switch to protect the boiler from low (1 Bar) or high (6 Bar maximum) pressure must be fitted to either the heating system or the boiler – to switch the boiler off in the event of these conditions – these are by others"

Recommended pressure of central heating installation is 1 - 4 bar, maximum pressure is 6 bar.

In the below picture the tapping locations are shown for our 300kW electric boiler and the smaller boiler sizes, on the 400 and 500kW boiler the connections are in the top left and right of the boiler.

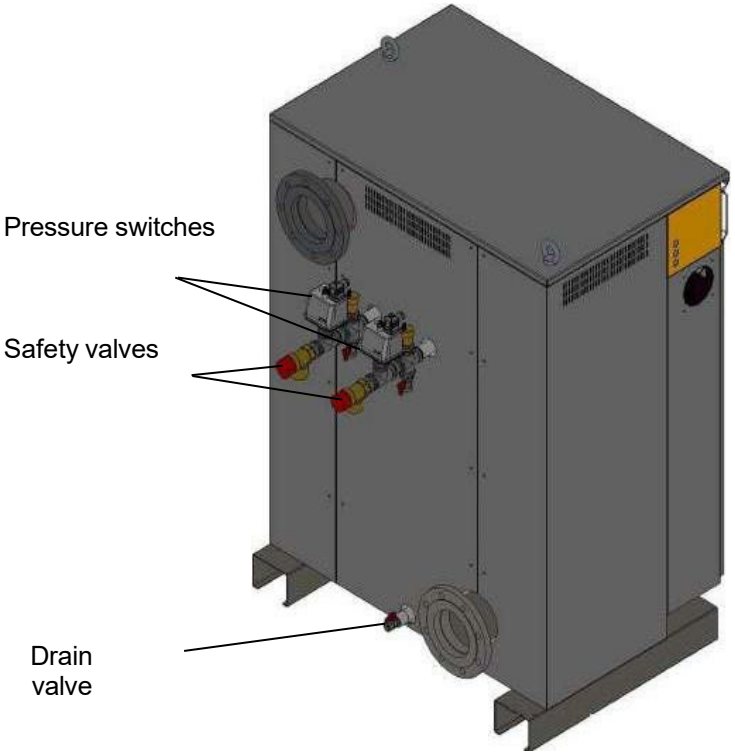

These connections should be used as a last resort, as they are at the back of the boiler(and out of sight is out of mind to us) . Good mechanical engineering practice is to install the safety valve (which can be a pure pressure relief valve or a pressure and temperature relief valve – it's your choice) in the pipework close to the boiler, so **that it is in free view**. This makes identification of a safety valve activation, easy to see as the water is expelled into the tundish. Also having the Hi/Low pressure switch in view as also a good idea.

3.3. Installation site

3.3.1. Position of the boiler

The location must provide adequate space for servicing and air circulation around the boiler. The boiler must be mounted on a flat, horizontal floor, which must be sufficiently robust to bear the weight of the boiler.

The ambient temperature where the boiler is located must not exceed 25°C.

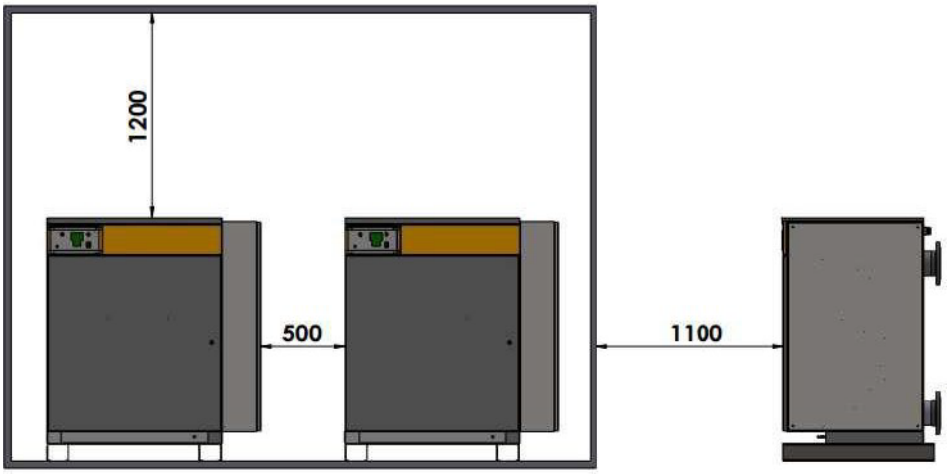

3.4. System requirements

3.4.1. Pipe work

Pipe work that is not a forming part of the useful heating surface should be insulated to help prevent heat loss and possible freezing, particularly where pipes are run through roof spaces and ventilated under floor spaces. Draining taps must be located in accessible positions, which permit the draining of the whole system including the boiler and the hot water system. All capillary joints in all DHW pipe work must be made with lead free solder.

3.4.2. Cleansing and flushing the system

Flushing of system is highly recommended. This will prevent damage to the appliance made by dirt from the system.

Particularly where a new boiler is to be fitted to an existing system, it is a good practice that the system is thoroughly cleansed.

To prevent the formation of deposits and to prevent serious damage to the appliance and system, cleansers must be used carefully and must be completely removed by thoroughly flushing the system. Cleansers should only be left in systems for a maximum of 24 hours.

3.4.3. Filling and preparing a heating system

The system can be filled via a separate filling point fitted at a convenient position on the heating circuit. The connection must be removed when filling is completed. Where the local Water Authority regulation does not allow temporary connection, a sealed system filler pump with a break tank must be used. The heating system will not be filled automatically from the domestic hot water side.
Regularly check that the water pressure is correct. Air may remain in the system for a while after installation, so venting should be repeated a few times.

Note:
For the heating system to operate properly the pressure must be between 1 and 4 Bar when the system is cold. It is particularly important to use <u>soft water or fluids for central heating</u> (see chapter 2.6).

Do not fill the system with water from private sources! i.e., borehole water

3.4.4. Pressure relief valve

A pressure relief valve is not provided with the boiler. A pressure relief is required on all sealed C.H. systems and is to be set at 6.0 bar. The pressure relief valve must not be used for draining purposes.

To preserve the safety function, the safety valves in the heating system must be closed and opened four times a year.

4. Boiler installation sequence

4.1. Select position for boiler

Refer to chapter **3.4.1.** for information regarding the appliance position. In general, the boiler must be positioned in such a manner that:

- There is enough space around the boiler for service and maintenance
- There is no chance for the boiler to be submerged into water
- There is no chance for the boiler to be splashed with a significant amount of water
- Normal level of air circulation can be maintained
- All necessary pipe work can be connected

4.2. Power supply connection

Note:
Before working with the appliance, turn off the power supply (circuit breaker) and secure against restart.

A boiler is rated as a high-power appliance and fixed wiring must be used. Please observe chapter 2.2. for fuse and conductor requirements. When connecting the appliance to the wiring, the means for disconnection circuit breaker) must be incorporated in fixing wiring in accordance with the local wiring rules and regulations.

This device must be earthed.

Power cable must be connected to input terminals; earth must be connected to a separate terminal.

4.3. Cables and connection points for Thermo Max boilers

Firstly
Neutral is not required for main power supply, only 3 phases and earth.
Neutral is required for the control panel power which is single phase 230 V.

Please note: the maximum consumption of the control panel (including fan) is 500 Watts, and has a 6 Amp fuse.

4.3.1. Cable Entry

120kW to 300kW models
The cables come in at the bottom of the boiler –

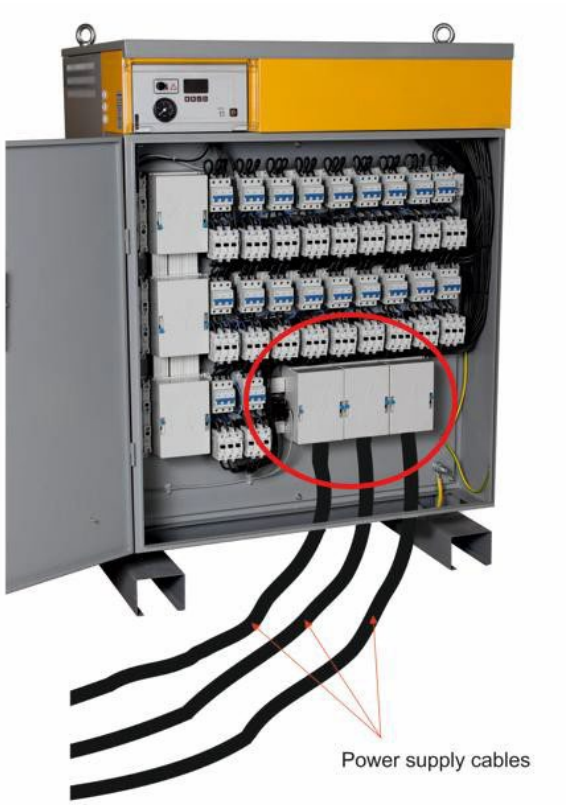

To suit the site's conditions

On the 400kW & 500kW models the cables enter from the right-hand side of the unit from the front as you look at the boiler, but the cables enter from the rear of the unit – like so

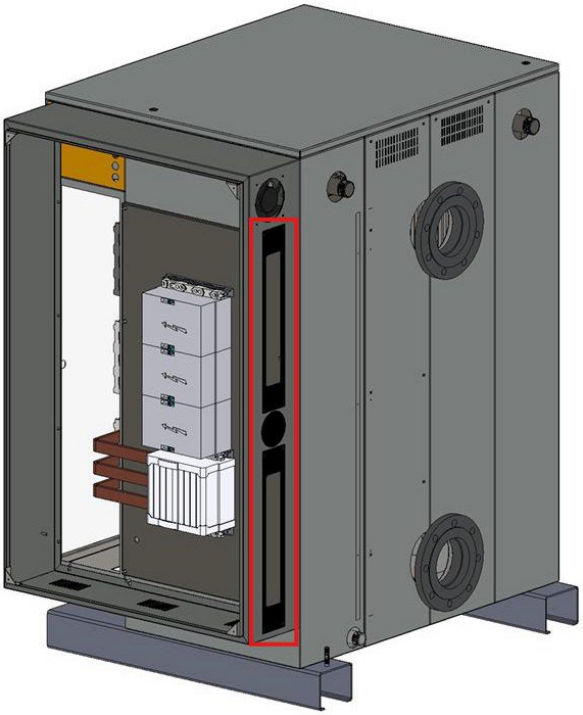

4.3.2. Cable Connections within the boiler

On section 2.4 you will see the following data

2.4 Nominal current per phase

Model kW	120	150	180	210	255	300	400	500
Power cable* mm²	70	120	150	185	185	2x(120)	2x(185)	3x(150)

On the 300 and 400 models they have a connection plate that has two connection points per 3 phase cable -

Picture 1 Connection plate type A

This allows 2 x 120mm² **cables to be connected per phase** on the 300kW output boiler

And

2 x 185mm² cables **to be connected per phase** on the 400kW output boiler

There are 3 connection plates for the power supply inside for the Thermo Max 500, **each plate has 3 terminals L1-L2-L3**. See picture of connection plate below:

Altogether there are 9 connection terminals for the boiler, 3 each per phase for the 400 & 500kW units

It means that the customer has the possibility to use 3 power cables (per phase) to supply the boiler.

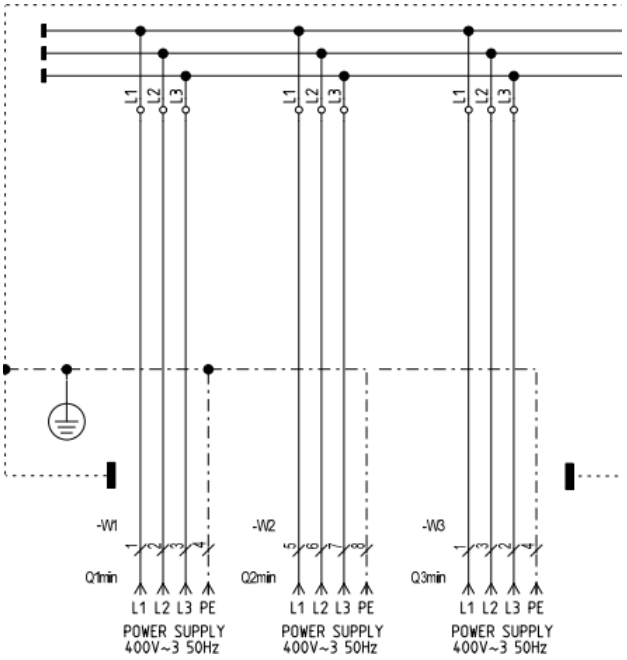

Why do we have this cable connection facility?

The maximum current of the Thermo Max 500 kW is around 722 Amps, which means the customer will need more than 1 cable for the power supply (**maximum cross section of cable that can be connected is 300mm2 and the maximum current that 300mm2 can carry is around 500 Amps, which is not enough for 500 kW of boiler output**.
Thus, you would need at least 2 cables, or 3 if a smaller cross section less than 300mm2 is used.

Connection plates in ThermoMax boilers			
	Number of connection plates	**Connection plate type**	**Max number of supply cables**
ThermoMax 120	1	B	1
ThermoMax 150	1	B	1
ThermoMax 180	1	B	1
ThermoMax 210	1	B	1
ThermoMax 255	1	B	1
ThermoMax 300	2	1A + 1B	2
ThermoMax 400	2	B	2
ThermoMax 500	3	B	3

Note:

Please observe British Standard BS 7671 while choosing power supply cables if more than 1 cable are used.

Regulation 433.4:
"Two or more conductors in parallel may be used as a single protective conductor or live conductor, provided they meet certain requirements."

Regulation 523.8:
"Where conductors are installed in parallel in order to share the current, they shall be of the same cross-sectional area, the same length, the same type, and run together in the same conduit, trunking or cable tray…"

4.4. Connecting temperature sensors or external electrical controls

4.4.1. Accessing connection terminals

In order to access connection terminals, the top protection cover must be removed by unwinding two screws for hanging boiler.

4.4.2. Connecting external temperature sensor

External temperature sensors (delivered with boiler) must be fitted in such manner that it is not affected by sudden temperature changes (exposure to direct sunlight). When fitting sensor please observe the arrow marking top position (it can be seen when protective cover is removed).

Note:

For connecting external temperature sensor two-wire cable can be used, of diameter from 0.6mm^2 to 1.5 mm^2.

4.4.3. Connecting room thermostat and time switch

The boilers terminals 3, 4 and L N PE (power supply for control unit) are for connecting room thermostat or another external control unit. Terminals 4 and L (power supply for control unit) are linked together. If external control unit is used this link must be removed.

4.5. Connecting external alarm and display of power/stage control

Boiler can be connected to an external system providing output for alarm signal and display of active power/stage.

4.5.1. External alarm connection

The control board allows for an alarm connection. The alarm can be triggered by air in the boiler, defective temperature sensor, under voltage or the overheating protection thermostat. Please observe electrical drawing – 2.8 under the control section for more details.

4.5.2. Connection for external display of power/stage

The control board allows for an analogue output (AO1), sending a 0-10 Volt DC signal which is used for power and temperature information depending on which one is activate at the time. Please observe electrical drawing 2.4, in *the control section* for more details.

4.6. Connecting boilers in cascade

For cascade boiler connection please see electrical diagram 2.71 under the controls section.

Note:
For cascade connecting it is necessary that live and neutral wires of control power are connected correctly on all boilers. If any of the boilers are live and neutral wires replaced, cascade won't be activated.

5. Commissioning

5.1. Central heating system check

Check for pressure in the system, it should be from 1.0 to 4.0 bar when the system is cold. Vent all heating elements and installation.

5.2. Preliminary electrical check

For three phase system:

- Check if the power cable is tightened on the power terminals
- Check the presence of each phase on input terminals inside boiler
- Measure exact voltage between L1 – L2, L1 – L3, L2 – L3, L1 –N. If there is no voltage between any combinations of phases one phase is missing and the heating elements inside the appliance can be damaged. If the voltage between phases is 10% higher than nominal voltage of the appliance, the appliance itself can be damaged

6. Working with control panel

6.1. “X” Control panel information

Our “X” control panel is a one and all control panel, which can do weather compensation when our optional external air temperature sensor is used and can control an indirect “DHW” cylinder when using our optional immersion tank sensor.

6.2. Introduction to control panel

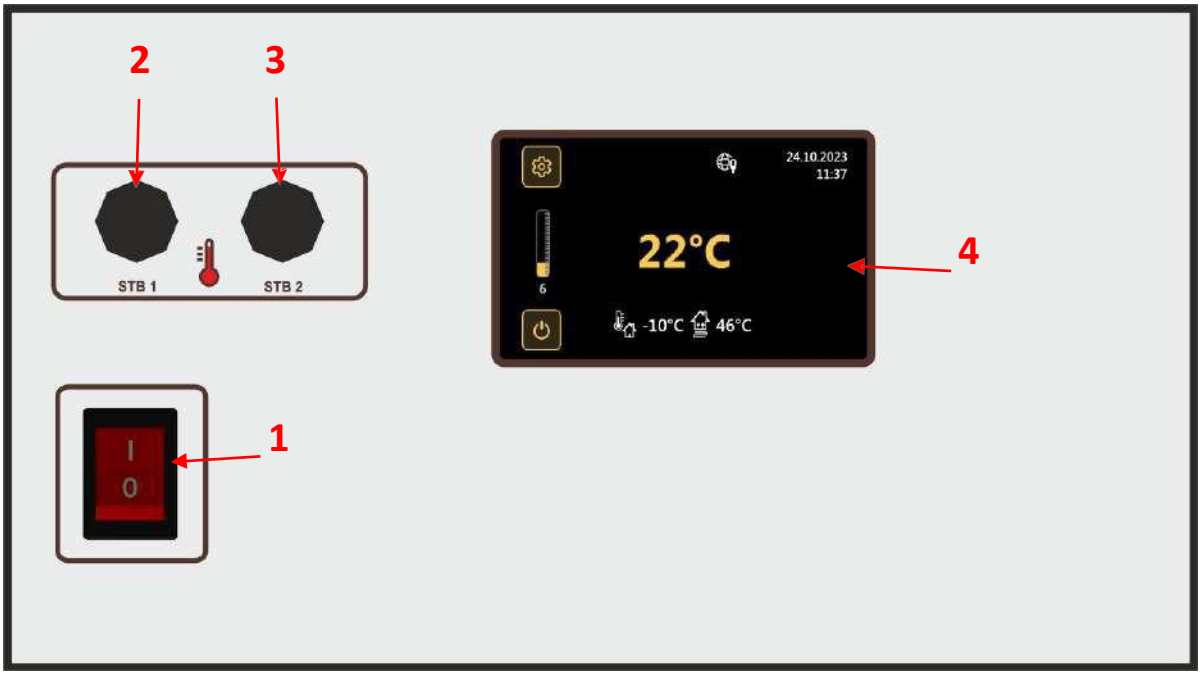

Mark	Description
1	Control panel power switch
2	Cutout thermostat with manual deactivation (1)
3	Cutout thermostat with manual deactivation (2)
4	Touch screen

6.3. Control panel display

Control panel in stand-by mode

Operating panel

6.4. Entering and navigating through the user menu

Touch icon to enter the user menu.

Touch icons or for moving through the menu and changing values.

Touch the desired option or symbol to select and confirm the value.

Touch the symbol to leave the option without making any changes or to leave the menu itself.

6.5. User menu options

Menu language	Language selection for menus and messages
Power limit	Limiting the maximum number of stages
Info	Display of information about the device itself and the operation of individual groups of heaters and the energy used
Day/night mode	Enabling/disabling operation in day and night mode
Night temperature (displayed only if Day/Night operation is active)	Setting the night mode temperature
Beginning of night work (displayed only if Day/Night operation is active)	Setting the start time of the night mode
End of night work (displayed only if Day/Night operation is active)	Setting the end time of the night mode
Network settings	Settings for connecting the boiler to the network
Service menu	Example of changing the date and time

6.6. Example of changing the date and time

	Tap on the date and time screen to open the settings. **REMARK:** **The time and date are automatically updated over the network!!**
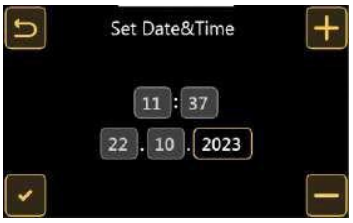	Touch the field you want to change the value of, then after the marked field frame, by touching the symbol or set the desired value. Touch the symbol 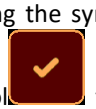 to confirm and save the change or touch for recall.

6.7. Selecting the desired boiler temperature

The function is not available when the outdoor sensor is active.

	Display of the desired boiler temperature
	Touch the display of the desired temperature on the screen to open the adjustment menu.
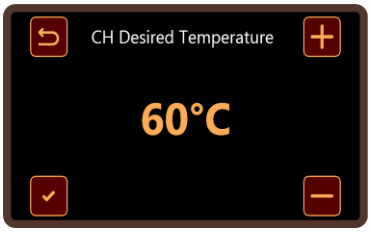	Touch the symbol or to set the desired value and touch to confirm and save the change or touch for recall.

	It is also possible to adjust the desired value using the dial. To access the dial, touch the displayed temperature on the screen.
	Tap to enter the desired value, then tap the symbol on the screen to confirm and save the change or touch for recall.

6.8. Offsetting heating curve

The function is available only when the outdoor sensor is active.

	Boiler in operation with outdoor temperature sensor 1. Outdoor temperature display 2. Display of the required temperature determined by the temperature curve
	Touch the display of the external temperature on the screen to open the menu to adjust the offset of the temperature curve.
	By touching symbols or set the desired value and touch the symbol to confirm and save the change or touch for recall.

	It is also possible to adjust the desired value using the dial. To access the dial, touch the displayed temperature on the screen.
	Tap to enter the desired value, then tap the symbol on the screen to confirm and save the change or touch for recall.

6.9. Connecting the control panel to the network

The RJ45 connector on the back of the control panel is used to connect the boiler to the network.

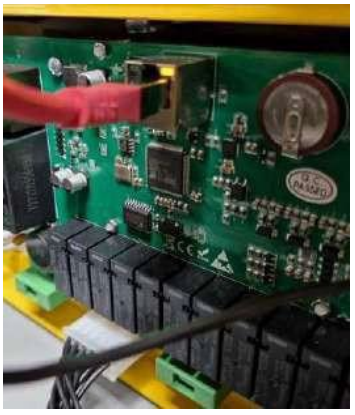

Picture 1 Connecting to network

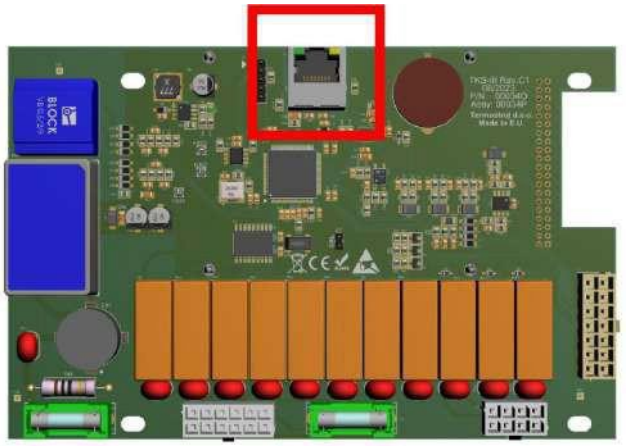

Picture 2 RJ45 connector position

	Control panel connected to the network. To display the network settings, touch the marked icon on the screen.
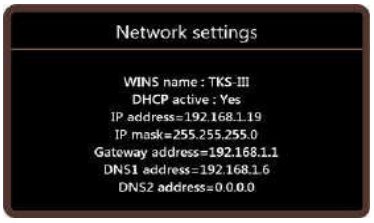	Network settings view.
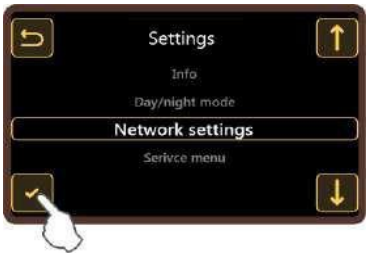	To adjust the network parameters, it is necessary to select the "Network settings" option in the user menu.
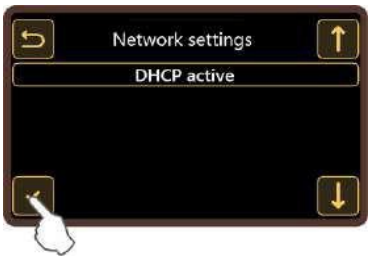	If DHCP is active, it must be deactivated to adjust the parameters.
	DHCP activation/deactivation.
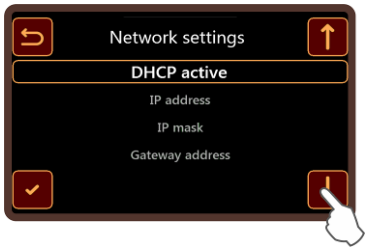	Use the drop-down menu to select the desired parameter for adjustment. - IP address - IP mask - Gateway address - DNS1 address - DNS2 address

6.10. Entering and moving through the service menu

	To access the service menu, select the "Service menu" option in the user menu
	Enter the PIN to access the service menu. **PIN code:** *334112*
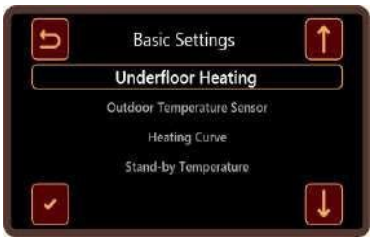	Touch icons or for moving through the menu and changing values. Touch the desired option or symbol to select and confirm the value. Touch the symbol to leave the option without making any changes or to leave the menu itself.

6.11. Service menu options

Option	Description
Underfloor heating	Switching the underfloor heating option on or off. Turning this function on or off will reset the selection of the correction curve, minimum and maximum temperature to factory settings.
Outdoor temperature sensor	Enable or disable the use of an external temperature sensor. When the outdoor temperature sensor is on, the boiler temperature will be guided according to the heating correction curves.
Heating curve	Selection of the heating correction curve for underfloor or radiator heating.

(displayed only if the outdoor temperature sensor is active)	**Factory value:** - **Radiator heating: 1.5** - **Floor heating: 0.6**
Stand-by temperature	The minimum temperature that will be maintained in the boiler when in standby mode. **Factory value: 15 °C**
Minimum boiler temperature	Limitation of the minimum boiler temperature that can be selected. Factory setting value: - Radiator heating: 40 °C - Floor heating: 15 °C
Maximum boiler temperature	Limitation of the maximum boiler temperature that can be selected. Factory setting value: - Radiator heating: 80 °C - Floor heating: 40 °C
Counter reset	Resetting the operation counter of all groups of heaters. Work counters are located in the User menu -> Information
Power step on delay	Time delay between activation of power levels in seconds.
Cascade	Boiler operation in which it is signaled when the boiler is working at maximum power and gives a signal to the next boiler connected in the cascade to start.
Control mode	Control mode choice: - Manual (local) - Remote – by temperature - Remote – by power - MODBUS
Current limit	Maximum boiler current limitation (0 – 500 A)
Factory settings	Boiler factory defaults

6.12. Signaling and display of errors in operation

Error example „Overheating “

If the boiler overheats, the overheating symbol will flash at the top of the screen.

Tapping on the error symbol will open a message with a more detailed description of the error.

A message with a description of the error.

Error example “Air in boiler”

If there is air in the boiler during operation, the symbol for air in the boiler will flash at the top of the screen.

Tapping on the error symbol will open a message with a more detailed description of the error.

A message with a description of the error.

6.13. Cascade mode

Cascade mode must be enabled in the service menu section:

"Cascade mode"

Cascade mode must be enabled on all slave boilers that are connected to the cascade!!!

Do not turn on Cascade mode on the primary (master) boiler.

In cascade mode, the input and output signal symbols of cascade operation are shown on the screen.

The operation input is given to the primary (master) boiler through a voltage-free contact, and to the slave boilers also in the same way, but the slave boilers must be connected to the panel of the primary (master) boiler, that is, to the previous slave boiler as described in chapter 2.7.

The boiler is working in cascade mode.

The cascading icon is displayed.

The boiler is operating at maximum power in cascade operation.

The maximum power signal is active.

The symbol shows that the maximum power signal is active.

There is no display of the requested temperature at the bottom of the screen.

The boiler in cascade operation is waiting for an order to operate from an

If boilers in cascade operation are controlled by means of an external temperature sensor or by means of analogue input signals 0-10 V, external control is performed only on the primary (master) boiler, all slaves must be set to "Local" control mode, and the external temperature sensor must be switched off. **External control will be disabled automatically on all slave boilers if cascade mode is activated.**

It is recommended that the desired temperature be set to the maximum possible on all slave boilers in order to avoid power modulation of individual slave boilers.

6.14. Remote control 0-10 V

Select the desired control mode from the service menu section:

"Control mode "

Remote power control

If remote power control is selected as the control mode, the remote-control symbol and information about the active number of steps depending on the value of the input signal AI1 will be displayed at the bottom of the screen.

If the maximum power signal is activated by input signal AI1, the same will be displayed as in the photo.

The maximum power signal is used if there is a need for cascade mode of operation.

Remote temperature control

If remote temperature control is selected as the control method, the remote-control symbol and information about the set temperature of the boiler will be displayed at the bottom of the screen depending on the value of the input signal AI1.

If the value of the input signal AI1 is equal to 0 V, the operation of the boiler will stop.

At the bottom of the screen a symbol will be displayed as in the photo

7. Connecting module

7.1. Connecting module layout

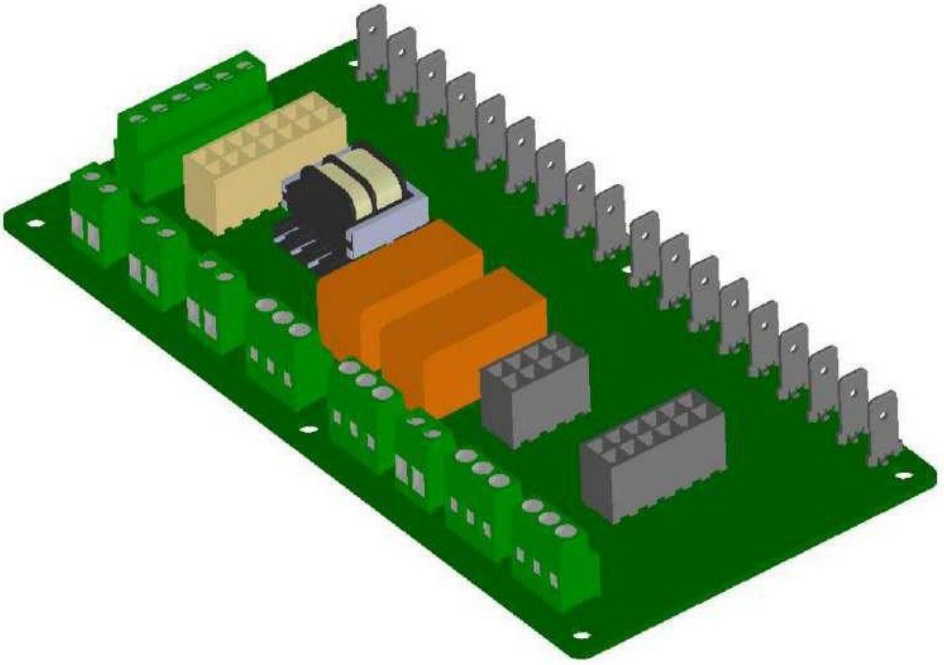

Picture 3 Connecting module

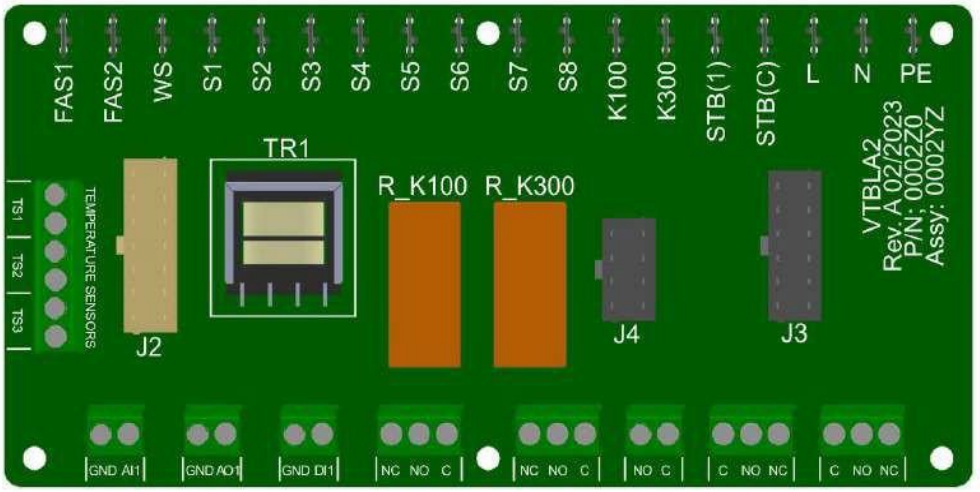

Picture 4 Connecting module – pin layout

7.2. Outdoor temperature sensor connection

The outdoor temperature sensor is connected to the screw terminals marked "TS2" on the connection module.

The terminals of the outdoor sensor and the connection method are shown in the picture below:

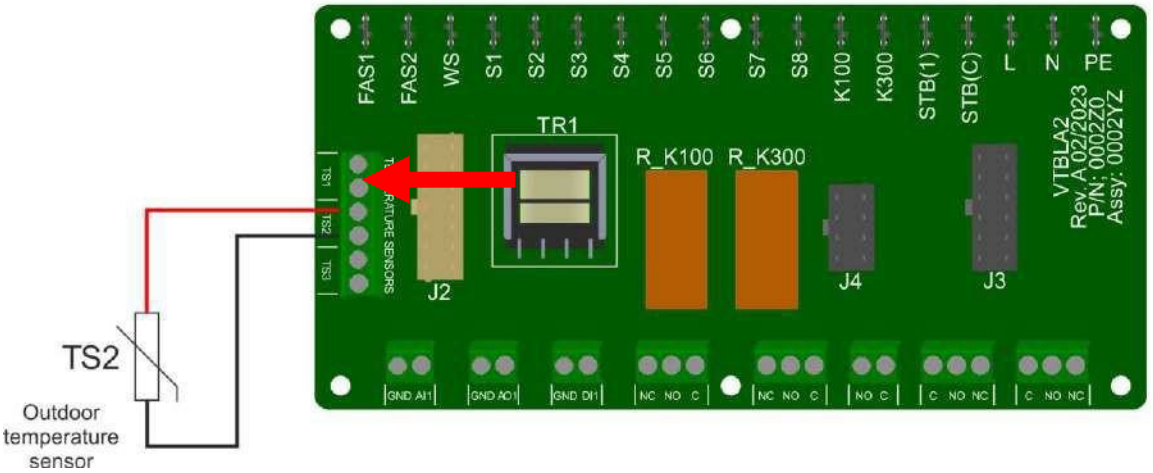

Picture 5 Connecting the external temperature sensor.

7.3. Connecting the sensor for DHW tank

The sensor for DHW tank is connected to the screw terminals marked "TS3" on the connection plate.

The sensor terminals for DHW tank and the connection method are shown in the picture below:

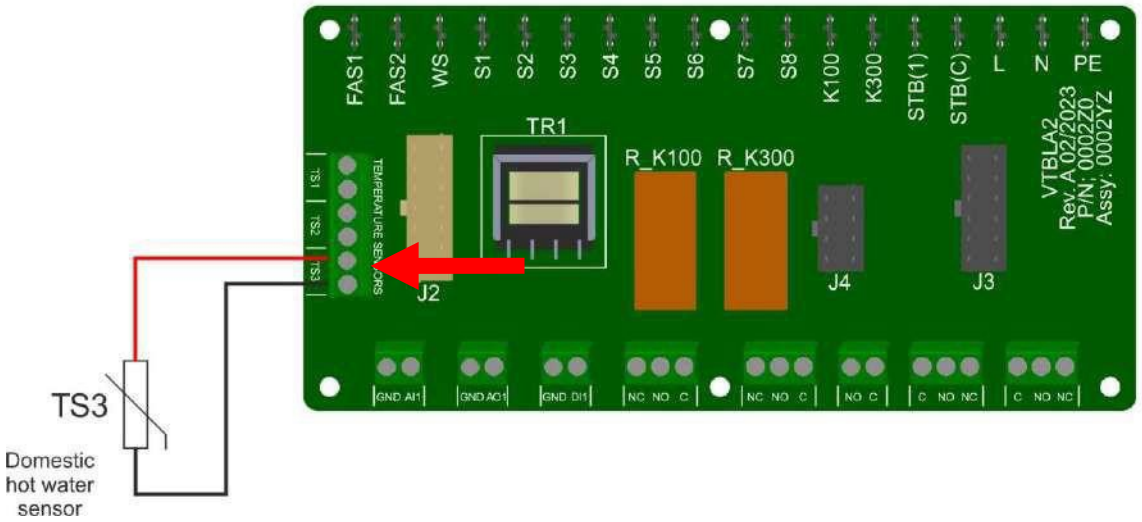

Picture 6 Connecting the sensor for

7.4. Connection of signals for remote control via analogue inputs

In the case of remote control via analogue signals 0-10 V, the following terminals are connected to the connection module:

a) AI1 – analogue input
(depending on the settings, it is possible to manage the desired temperature of the boiler or the desired active power)

b) AO1 – analogue output
(depending on the settings, the control panel on pin "AO1" generates a voltage as information about the current temperature of the boiler)

c) DI1 – digital input
(Order to start/stop the boiler. A short circuit with the "GND" pin sends an order to the boiler to operate, while an interruption sends an order to the boiler to stop operation)

Remote control terminals are shown in the picture below:

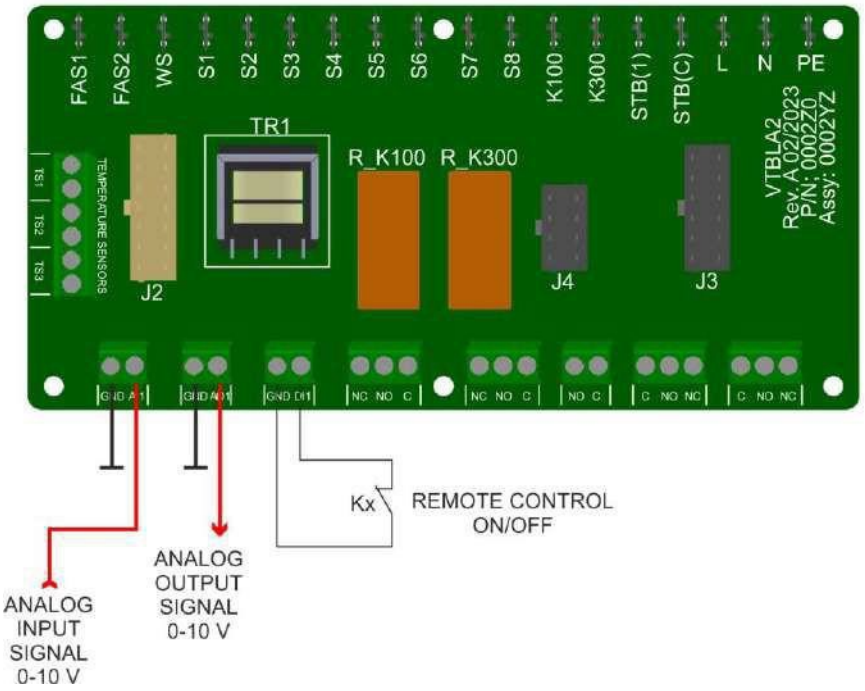

Picture 7 Signals for external control

7.5. Contacts connection remote MCB shutdown

In case of overheating, when the temperature inside the boiler reaches a value of 110°C, by default (this is adjustable for 90 °C to 110 °C to suit site requirements) the safety thermostats will activate the -K100relay

In order to prevent the destruction of the boiler, it is necessary to interrupt the main power supply of the boiler in such a way as to turn off the main protective device MCB of the same.

On the connection module, 1 C/O voltage-free contacts of the relay -K100 are made and depending on the MCB device of the main switch, it is possible to select NO or NC type of contacts for automatic shutdown of the main switch in case of emergency.

The contacts of the relay -K100 for turning off the main switch must necessarily be connected to the switch-off device, otherwise the warranty on the boiler cannot be verified.

The following images show both options for connecting the contacts for automatic emergency shutdown.

Option 1:

NO contacts for automatic shutdown in case of emergency

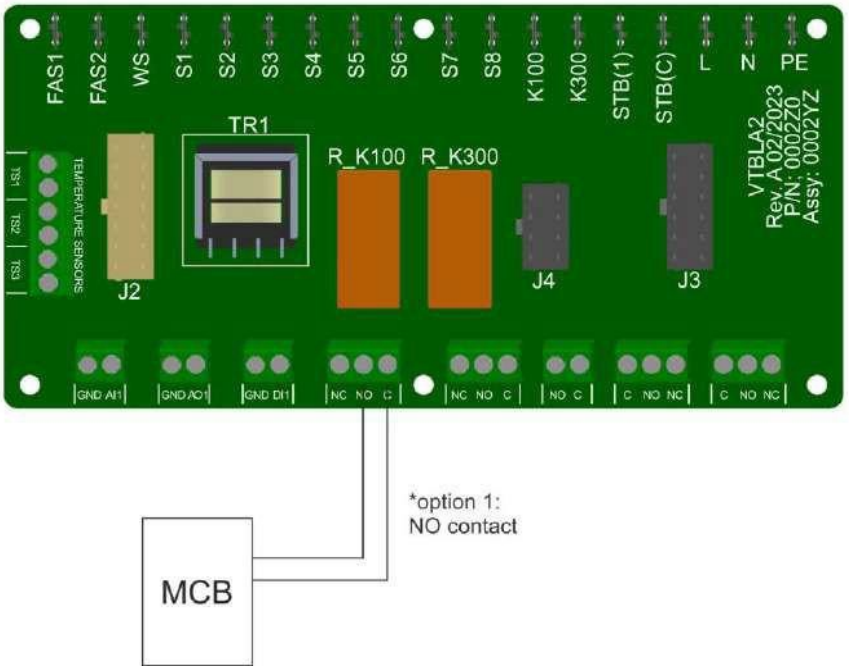

Picture 8 Option 1 - NO

Option 2:

NC contacts for automatic shutdown in case of emergency

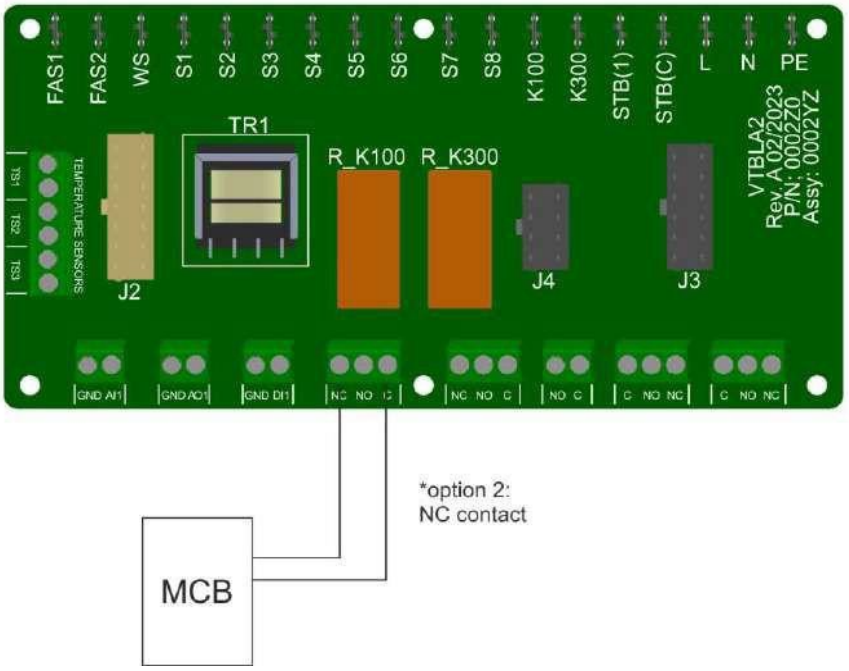

Picture 9 Option 2 – NC

7.6. Connecting pressure switches or other protective devices

On the connection module there is a relay -K300 with 1 C/O contact outputs, to which the user is free to connect a pressure switch or any similar protection/signaling device.

The relay is activated by connecting the signal conductor of the device (230 V; 50/60 Hz) to the faston output, which will activate the relay at the moment of action. Also, on the connection module there are outputs of the relay contacts, and they are used in a similar way as in the case of the -K100 relay.

The figure below shows the faston outlet and the contacts of the relay -K300.

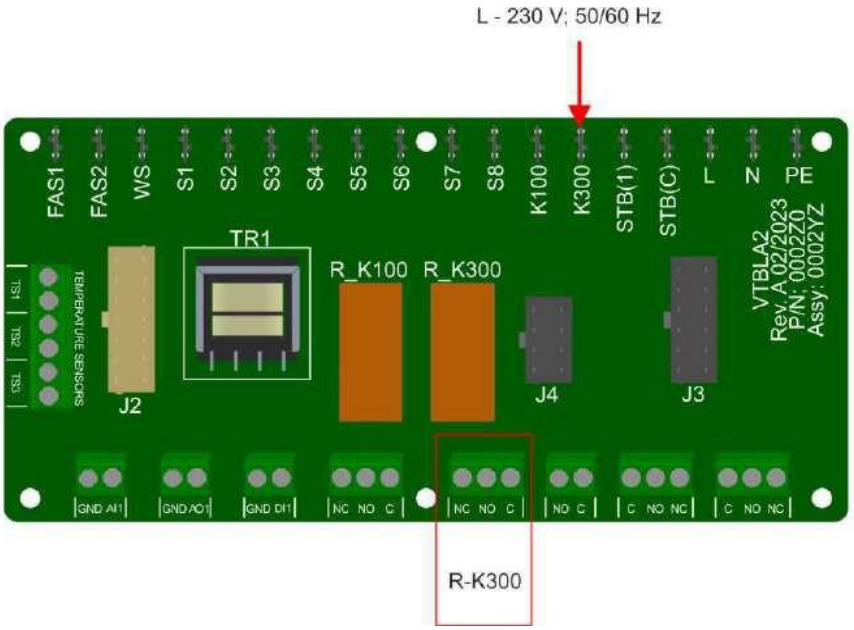

Picture 10 Connecting relay -K30

7.7. Maximum power signal

If the boiler reaches the maximum level of power, a signal will be activated on the connection module, and it is used to give an order to start operation to the next boiler with which it is connected in cascade.

The maximum power signal and boiler connections in a cascade are shown in the picture below:

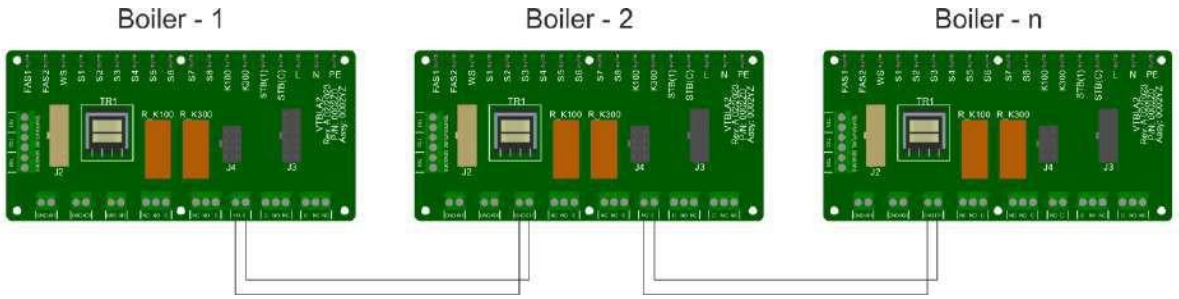

Picture 11 Cascade mode connection

7.8. Alarm

In case of any boiler malfunction, the control panel will deactivate the alarm relay, which is constantly activated during normal operation. The voltage-free 1 C/0 contacts of the same are available to the user on the connection plate.

The alarm relay contacts are shown in the picture below:

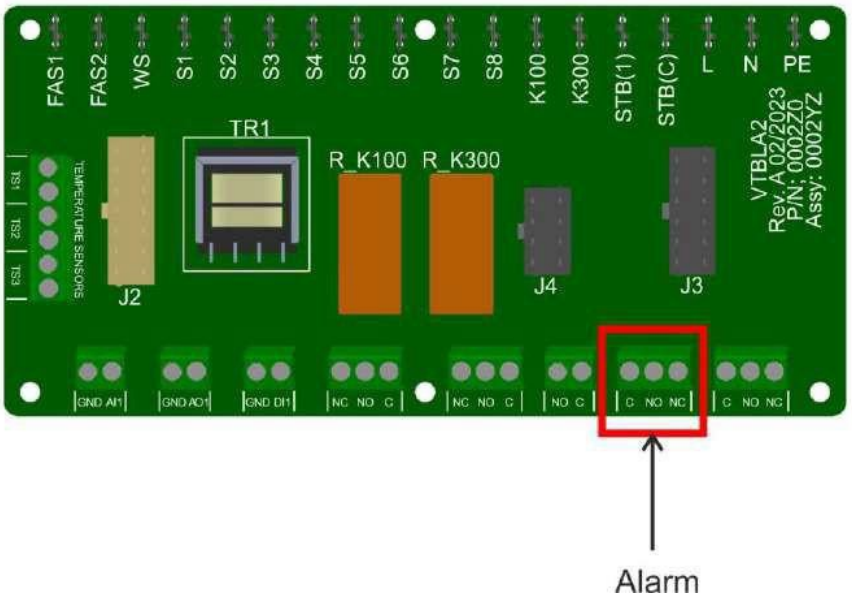

Picture 12 Alarm relay contact

8. Maintenance

8.1. Periodic checking

We recommend the inspection of the device once a year by the authorized service provider (before heating season). This service is not included in the warranty. **During the inspection, all electric and water connections should be tightened, the system should be vented and – if necessary – filled up, valves and general functionality of the device should be checked.**

Safety thermostat – we recommended to check the safety thermostat before every heating season by heating up the sensor with a heating blow lamp to over 100°C - this must actuate the overheating protection by switching off the boiler.

After approx. 500 hours of operation, the contact screws must be tightened using a torque wrench.

The safety valve should be checked four times a year (especially before the beginning of heating season) to ensure proper functioning and to avoid appearance of water calculus.

8.2. Cleaning

It is not permitted to use aggressive media (e.g. gasoline, kerosene or solvent) for cleaning the product. Media for cleaning plastics or dishwashing media can be used for the external shell and decorative cover. The control panel should be cleaned with dry or moist cloth (not wet).

9. Troubleshooting

Air in Boiler	Air is present inside the boiler's reservoir and heating is not active. Even if boiler is equipped with automatic venting valve, manual venting is advisable if large amount of air is present inside reservoir. When the boiler is properly vented the error will be automatically dismissed and the boiler will continue with normal operation.
Low Mains Voltage	Power supply voltage is below 180 V per phase. Heating is not active in order to protect contactors / power relays. When power supply voltage rises above 180 V per phase error will be automatically dismissed and boiler will continue with normal operation.
Outdoor Temperature Sensor open	The outdoor temperature sensor is not properly connected. Check the sensor's wiring. When the sensor is operational, error will be automatically dismissed, and boiler will continue with normal operation. *Refer to **the Temperature sensor** section of this chapter for more details on troubleshooting temperature sensor.*
Outdoor Temperature Sensor shorted	The outdoor temperature sensor is not properly connected, or a short circuit is present on the sensor's wiring. Check the sensor's wiring. When the sensor is operational, error will be automatically dismissed, and boiler will continue with normal operation. *Refer to **the Temperature sensor** section of this chapter for more details on troubleshooting temperature sensor.*
Boiler Temperature Sensor open	The boiler's temperature sensor is not properly connected. Check the sensor's wiring. When the sensor is operational, error will be automatically dismissed, and boiler will continue with normal operation. *Refer to **the Temperature sensor** section of this chapter for more details on troubleshooting temperature sensor.*
Boiler Temperature Sensor shorted	Boiler's temperature sensor is not properly connected, or short circuit is present on sensor's wiring. Check the sensor's wiring. When the sensor is operational, error will be automatically dismissed, and boiler will continue with normal operation. *Refer to **the Temperature sensor** section of this chapter for more details on troubleshooting temperature sensor.*

Temperature sensor	If temperature sensor is properly connected but control panel is signaling problem, use following table to compare measured resistance of sensor with actual temperature readings.

AMBIENT TEMPERATURE		RESISTANCE (Ω)		
(°C)	(°F)	MIN.	TYP.	MAX.
−20	−4	1338	1367	1396
−10	14	1467	1495	1523
0	32	1603	1630	1656
10	50	1748	1772	1797
20	68	1901	1922	1944
25	77	1980	2000	2020
30	86	2057	2080	2102
40	104	2217	2245	2272
50	122	2383	2417	2451
60	140	2557	2597	2637
70	158	2737	2785	2832
80	176	2924	2980	3035
90	194	3118	3182	3246

There is no voltage on the control panel at switching on	Power supply on one or more phases is missing, please check wiring to boiler's power terminals. Fuse on the control panel has been blown and should be replaced. The circuit breaker has been disconnected, please check it.
Boiler can't reach desired temperature	Check symbols on control panel if all heating stages (7) are active, also check voltage between phases on boiler's power terminals. If all heating stages are active and voltage between phases is correct, defective heater(s), fuse(s) or contactor(s) can be responsible and should be replaced.
Boiler is reaching desired temperature but does not provide heat to system	Check symbol on control panel if pump is active (12) and running

Boiler in operation "roars"	Heating system/boiler should be vented.

The contactors are noisy	Boiler is equipped with under voltage protection in order to protect contactors. Possible cause is faulty contactors.

Boiler operates incorrectly, moving up a couple of stages before immediately moving down again, etc…	The flow of water through boiler is too low, please refer to chapter *2.5 The boiler flow requirements.* Pump or valves could be defective and should be checked.

10. EU Declaration of Conformity

EU Declaration of Conformity (DoC)

We

Company name: FlexiheatUK

Postal address: 49 Azura Cl, Woolsbridge, Three-Legged Cross

Postcode: BH21 6SZ

City: Wimborne

Telephone number: 01202 822221

E-Mail address: Sales@flexiheatuk.com

declare that the DoC is issued under our sole responsibility and belongs to the following product:

Apparatus model/Product: ThermoMax

Type: 120-500 kW

Batch: any

Serial number: any

Object of the declaration (identification of apparatus allowing traceability; it may include a colour image of sufficient clarity where necessary for the identification of the apparatus):

ThermoMax 120-500kW

The object of tile declaration described above is in conformity with the relevant Union harmonisation legislation; EMC Directive 2014/30/EU

2014/35/EU (LV0)	EN 60335-1:2012+A11:2014, EN 60204-1:2018
2014/30/EU (EMC)	EN !EC 61000-6-2:2019, EN 61000-6-42019 EN
2014/68/EU (PED)	13445-3:2021

The following harmonised standards and technical specifications have been applied:

Title, Date of standard/specification:

Additional information:

Signed for and on behalf of: FlexiheatUK

Date of issue:2025

Name, function: Jeremys Grove, Managing director

1. General information

The product must be maintained according to the instructions in this booklet, and at intervals as prescribed in the booklet.
Boiler maintenance must be performed by a qualified person.
Failure to follow these instructions voids the product warranty.
The water quality requirements need to be checked as well, and these are detailed in the main boiler manual, as with safety valve testing etc. This service manual covers the electrical elements of the boiler only.

2. The purpose of maintaining electrical contacts

Due to the flow of electric current through the contacts, heat dissipation occurs in them, which over time leads to a weakening of the contact connection. During the operation of the device, vibrations occur due to the assembly of the switching devices, which further reduces the force between the contacts. Even if the device is not in operation, the contacts can also release themselves, which can also cause increased heating of the contacts and cause damage to the device.
For the boiler to work properly, and to prevent possible damage to the contacts, it is mandatory to periodically maintain the contacts of all elements of the electrical part of the boiler.

3. The period of maintenance of electrical contacts

All electrical contacts are checked at the factory during the final production test, but upon installation of the boiler it is necessary to carry out initial maintenance of the contacts due to the possibility of their loosening during the transport of the device.
The first (initial) inspection of the device **must be performed 3 months after the start of the device's operation**, after which maintenance is performed **every 6 months**.
For the warranty of the device to remain valid, maintenance must be performed no later than 7 days from the prescribed maintenance date.

4. Instructions for maintaining electrical contacts

The contacts must be tightened with a torque wrench, with the torque specified in the table (Table 1) from chapter 5 of this booklet for each element (recommended tightening torques differ depending on the sort and type of element).
In the same table, graphical representations of the elements with their names are given.
In case of a replacement of the factory element with an element that is not on the table, it is necessary to check the manufacturer's recommendation for the tightening torque and to also maintain the same element according to the instructions.
During each maintenance it is recommended to carry out thermal imaging of the electrical switches, contacts and the device in general for the purpose of early detection of possible irregularities in the operation of the device. The maintenance of the device must be **performed by a qualified person, and each maintenance must be recorded in the prescribed pages of this booklet**.

We reserve the right of changing these instructions without prior notification

5. Table of elements with specified tightening torque

Element	Specified tightening torque [Nm]	Graphic representation of elements
Switch disconnector SCHRACK MX112035	**8**	
Switch disconnector SCHRACK MX225035	**11**	
Automatic installation switch SCHRACK Amparo	**2,0**	
Switch SCHRACK LA30323.	**2,8***	
Switch SCHRACK LA30243.	**2,8***	
Switch SCHRACK LA30101.N	**1,2***	

Tubular heater	Electrical contacts (M4)	**1,5**	
	Fixing nuts (M6)	**2,5**	

Table 1 Default tightening torque of elements

***Refers to the main contacts of the switches**

6. Commissioning the device

The device must be commissioned by a qualified person!!!
By commissioning the device, a qualified person confirms that the device has been installed in accordance with professional standards and that there is no damage to the device, nor is there damage within the system in which the device is installed that could cause the device to fail.

6.1. Safety requirements for commissioning the device

The device must be **protected against current overload and short circuit**, and it must also be possible to remotely turn off the main power supply of the device in case of uncontrolled overheating.
In order to enable remote shutdown, it is necessary to connect the shutdown relay contacts (-K100) to the shutdown device (see the device diagram for more information).

6.2. Device warranty verification

The device was commissioned by: _____
Date of commissioning: _____
Operating hours of the device: _____

**Completed by a qualified person*
After the device is commissioned by a qualified person, and to **verify the warranty**, it is necessary to **record the commissioning on the service page** and send a copy of this to sales@flexiheatuk.com.

7. Maintenance record sheets

Each maintenance performed must be recorded in the record sheets provided for in this chapter.
Maintenance record sheets must be completed and signed by a qualified person.
Information about the working hours of the boiler can be found in the user menu of the control panel, section "*Info*".

Maintenance record no.: 1 - initial maintenance

	YES	NO
Electrical contacts tightened to the prescribed torque	☐	☐
Thermal imaging performed	☐	☐
General inspection of the device performed	☐	☐
Additional works on the device:	☐	☐

List of additional works:

_____

_____

_____

_____

Working hours of the boiler _____h

Notes:

_____

_____

_____

_____

Service performed by:

_____

Name and surname

_____

Date

_____

Signature

Maintenance record no.: _____

	YES	NO
Electrical contacts tightened to the prescribed torque	☐	☐
Thermal imaging performed	☐	☐
General inspection of the device performed	☐	☐
Additional works on the device:	☐	☐

List of additional works:

_____

_____

_____

_____

Working hours of the boiler _____h

Notes:

_____

_____

_____

_____

Service performed by:

_____

Name and surname

_____

Date

_____

Signature

Maintenance record no.: _____

	YES	NO
Electrical contacts tightened to the prescribed torque	☐	☐
Thermal imaging performed	☐	☐
General inspection of the device performed	☐	☐
Additional works on the device:	☐	☐

List of additional works:

_____

_____

_____

_____

Working hours of the boiler _____h

Notes:

_____

_____

_____

_____

Service performed by:

_____

Name and surname

_____

Date

_____

Signature

Maintenance record no.: _____

	YES	NO
Electrical contacts tightened to the prescribed torque	☐	☐
Thermal imaging performed	☐	☐
General inspection of the device performed	☐	☐
Additional works on the device:	☐	☐

List of additional works:

_____

_____

_____

_____

Working hours of the boiler _____h

Notes:

_____

_____

_____

_____

Service performed by:

_____

Name and surname

_____

Date

_____

Signature

Maintenance record no.: _____

	YES	NO
Electrical contacts tightened to the prescribed torque	☐	☐
Thermal imaging performed	☐	☐
General inspection of the device performed	☐	☐
Additional works on the device:	☐	☐

List of additional works:

_____

_____

_____

_____

Working hours of the boiler _____h

Notes:

_____

_____

_____

_____

Service performed by:

_____

Name and surname

_____

Date

_____

Signature

Maintenance record no.: _____

	YES	NO
Electrical contacts tightened to the prescribed torque	☐	☐
Thermal imaging performed	☐	☐
General inspection of the device performed	☐	☐
Additional works on the device:	☐	☐

List of additional works:

_____

_____

_____

_____

Working hours of the boiler _____h

Notes:

_____

_____

_____

_____

Service performed by:

_____

Name and surname

_____

Date

_____

Signature

Maintenance record no.: _____

	YES	NO
Electrical contacts tightened to the prescribed torque	☐	☐
Thermal imaging performed	☐	☐
General inspection of the device performed	☐	☐
Additional works on the device:	☐	☐

List of additional works:

_____

_____

_____

_____

Working hours of the boiler _____h

Notes:

_____

_____

_____

_____

Service performed by:

_____

Name and surname

_____

Date

_____

Signature

Maintenance record no.: _____

	YES	NO
Electrical contacts tightened to the prescribed torque	☐	☐
Thermal imaging performed	☐	☐
General inspection of the device performed	☐	☐
Additional works on the device:	☐	☐

List of additional works:

_____

_____

_____

_____

Working hours of the boiler _____h

Notes:

_____

_____

_____

_____

Service performed by:

_____

Name and surname

_____

Date

_____

Signature

Maintenance record no.: _____

	YES	NO
Electrical contacts tightened to the prescribed torque	☐	☐
Thermal imaging performed	☐	☐
General inspection of the device performed	☐	☐
Additional works on the device:	☐	☐

List of additional works:

_____

_____

_____

_____

Working hours of the boiler _____h

Notes:

_____

_____

_____

_____

Service performed by:

_____

Name and surname

_____

Date

_____

Signature

Maintenance record no.: _____

	YES	NO
Electrical contacts tightened to the prescribed torque	☐	☐
Thermal imaging performed	☐	☐
General inspection of the device performed	☐	☐
Additional works on the device:	☐	☐

List of additional works:

_____

_____

_____

_____

Working hours of the boiler _____h

Notes:

_____

_____

_____

_____

Service performed by:

_____

Name and surname

_____

Date

_____

Signature