FLEXIHEAT UK LTD
www.flexiheatuk.com
01202 822221

Wood Warm Air Heaters
FH50ECP and FH100ECP

INSTALLATION INSTRUCTIONS

Please read carefully the precautions for use and the instructions for use before any installation and commissioning.

1 TECHNICAL CHARACTERISTICS:

			FH50ECP	FH100ECP
Nominal thermal power		kW	50	100
TREATED AIR	Flow at + 20ºC	m3/ h	1700	3,400
	Static pressure useful	mm.ca	5	5
	Thermal jump	º C	45	45
Number of fans		Nº	1	1
		rpm	900	900
Electric tension		V	230	230
Weight		Kg.	240	440
Maximum load (dry wood)		**Kg.**	**10**	**20**
Hearth Dimensions (Long, Wide, High)		cm	83x50x60	115x70x65
Hatches Dimensions (Long, Wide)		cm	64x28	89.2x28

Heating power dry wood = 4000 kcal / kg

- **Recommendations**

- Carefully read the warnings that appear in the instructions, knowing that they contain important indications relating to the safety of the installations, their use and maintenance.
- Use wood as a priority to ensure good combustion of Heater.
- The installation must be carried out according to the standards in force in the country where it will be used, according to the manufacturer's instructions, by professionally qualified personnel or by a technical platform approved by the manufacturer. An error during installation can cause damage and risks to people and equipment, for which the manufacturer cannot be held responsible.
- Check the packaging and the integrity of the contents. If in doubt, do not use the heater and contact the distributor or the manufacturer.
- Do not leave the packaging elements within the reach of children, as they represent a source of danger.
- Keep the suction grilles free.
- In the event of a breakdown or malfunction of the appliance, unplug it, refraining from any attempt to repair it, and contact your distributor.
- As soon as you decide to stop using the appliance, you must not use parts that could constitute a source of danger.
- This appliance must be used for the use for which it is intended. Any other use will be considered inadequate and, if necessary, dangerous, relieving the manufacturer of responsibility and thereby voiding the manufacturer's warranty.
- Make sure that these instructions are always included with the heater.
- The regulatory protection of the heater must be ensured in accordance with the classification standards for the professional premises where it is installed.

If the appliance is installed in a place where there are disabled people and / or accompanied by children, it must be installed with protections in accordance with the regulations in force.

Never load more than 10 kg of log wood or briquettes for FH50ECP and 20Kg for FH100ECP, i.e. 50 and 100 kW.

In the event of overloading: Risk of deformation of the floor crosspieces and cracks in the brickwork Damage to the exchanger tubes, temperature rise, general deformation and damage to the heater.

1.1 PRINCIPLE OF FOOPERATION:

This Heater works with solid vegetable fuels; it is a heater whose operating principle is the production of direct heat through the use of thermal energy produced by combustion.

Heat exchange is produced when a flow of air generated by a fan is passed through the internal surfaces of the heat exchanger, without the aid of any intermediate fluid so called direct exchange. In addition, part of the thermal energy is produced by the low temperature radiation of the machine.
The gaseous residues resulting from the combustion (fumes), when the heat exchange is carried out, are expelled outside through the flue gas pipe at a temperature of approximately 280 ° C at maximum developed power.
The solid residues of gasoline combustion (ash) fall naturally thanks to a stainless steel grate in an ashtray drawer in the lower part.
This appliance is used for heating industrial environments and meets these standards. It can also be used for any other application, in this case, refer to the specific standards.

It cannot be installed in direct contact with explosive agents or in a flammable environment.

2 CONSTRUCTION OF THE APPLIANCE:

The heater is made of carbon steel sheet, developed according to European standards. Easy to access for normal cleaning and maintenance operations. It is composed of :
To) A rectangular-shaped combustion chamber briquetted by refractory elements.
b) A tilting hatch for loading solid fuels.
vs) A tubular heat exchanger with a large surface area with natural ventilation fairing.
d) A perforated ash collection drawer with adjustable primary combustion air intake ruler.

e) A flue connection fitted with a draft key through which the combustion residues pass to be expelled through the flue system to the outside environment.

- **Ventilation group**

The heater is equipped with a medium pressure centrifugal fan which allows the connection of a distribution duct.

- **Chimney Connection**

The heater is equipped with a circular outlet of a standard diameter where it is possible to connect and securely fix a metal flue (preferably insulated) to evacuate the gaseous fumes resulting from the combustion to the outside. The draft key integrated into the Flue outlet allows the output power of the heater to be regulated by limiting the natural depression of the flue gases

This flue must have the following characteristics:

- Diameter equal to or greater than the flue connection of the heater and without any reductions. (Ø 153 mm for FH50ECP and Ø 200 mm for FH100ECP)
- Do not add elbows with more than a 45 ° angle and raise the flue in this case by 1m per 45 ° elbow
- The Flue must be ended with a cap.

2.1 **PACKAGING AND TRANSPORT:**

The heater is shipped with plastic bubble wrap. The accessories are packed separately in cardboard packaging. Transport and unloading must be carried out with great care to avoid possible damage. Before accepting the packages, it is advisable to unpack the equipment in the presence of the carrier in order to ascertain the condition of the goods and therefore to avoid any dispute.Please take photographic evidence and email to sales@flexiheatuk.com

2.2 **INSTALLATION INSTRUCTION:**

The position of the wood heaters must be defined by considering the following indications:

- **Installation protocol**

- Position of the heater level, stably installed on a slab made for this purpose.
- Provide a safety distance of at least 1 meter from any obstacle around the heater.
- Do not obstruct the fan's suction grilles.
- Check that no obstacle hinders the distribution of the warm air.
- Make sure that maintenance and cleaning operations can be carried out easily.

- **Electrical connection**

This heater has been manufactured according to the EEC 73/23 directive and operates under a current of 240V single phase 50Hz.

- **Key and draft moderator**

- To regulate the draft, it is essential to install a draft stabilizer on the flue gas pipe
- In order to regulate combustion, a regulation key is integrated on the flue gas nozzle which will limit combustion when the heater is fully loaded and reduce combustion in order to increase autonomy, particularly at night.

The heater must be installed in accordance with all standards and laws in force in the geographical area of use of the heater.

2.3 **COMBUSTION GAS EVACUATION:**

The installed chimney will comply with the UK regulations in force and must have a draft regulator. This Flue must be twin wall insulated type to avoid the dew point. We offer an optional S/S flue starter kit with buffer to facilitate maintenance – 153mm for the 50kW and 200mm for the 100kw unit – This does not mean that the flue off this starter kit shouldn't be larger, as environmental conditions such as site elevation, proposed flue route etc – have an influence on the diameter of the flue required - Please consult a flue specialist to size your flue system correctly to your site conditions.

Never horizontal flue with 90 ° elbows

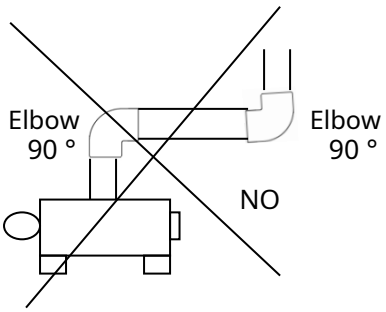

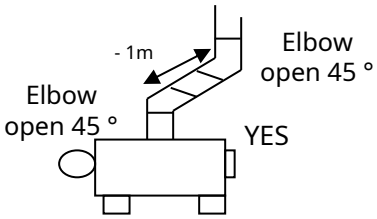

DRAW

The draft of a chimney is determined by the following formula:

$$T = H (YA - YB)$$

T = Draft in mm.ca
H = Height of the vertical chimney in meters. YA =
Specific weight of the outside air in kg / m^3.
YB = Specific weight of the combustion gases expelled in kg / m^3.

SECTION/DIAMETER OF THE FLUE SYSTEM

The section of the chimney for both models is determined by the following formula:

$$S = 8.61\ Q / H½$$

S = Section of the chimney in cm^2
Q = This is the power of the heater in kW / h.
H = The reduced height expressed in meters.

The reduced height of the chimney is defined by the following formula:

$$Hr = H - (N.\ 0.5 + L + R)$$

Hr = Reduced height
H = Actual height of the chimney.
N = Number of elbows.
L = Horizontal length.
R = Heater back pressure.

R = 1mm up to 50,000 kcal / h. R =
2mm up to 160,000 kcal / h.

NOTE: These values must be increased by 6% for every 500 meters of elevation above sea level.

FLUE DRAUGHT

During installation, at the time of commissioning, it is recommended to have a draft measurement called "depression" carried out in order to check the water column of the chimney's depression.
This measurement is carried out while hot when the heater is at its normal output after approximately half an hour of operation.
this draught /depression should be 2 mm wc (water column pressure) after the pull key.
It is therefore generally recommended to achieve this result a vertical flue height of 5mtrs for a fh50ecp and 6 to 7mtrs for an fh100ecp. But check this your flue installer/supplier.
In order to stabilize the draft, it is necessary to install at the outlet of the Ø 153mm nozzle for FH50ECP and 200mm for FH100ECP, a tee fitted with a regulator flap.

The draft measurement must be carried out under the shutter, which will allow the shutter to be balanced during the measurement.

The flue gas pipe must never be reduced to a diameter smaller than that of the outlet on the heater. **However, there is no problem if the** flue **is of a larger diameter. In the event of installation on an old brick chimney, it is essential to flue the chimney.**

IF YOU NOTICE AFTER SEVERAL HOURS OF OPERATION THAT SMOKE IS COMING OUT OF THE SIDES OF THE LOADING HATCH WHEN CLOSED, THE FLUE DOES NOT HAVE ENOUGH DRAFT. IT MUST THEREFORE BE ENHANCED TO HAVE THE APPROPRIATE DRAUGHT. IT IS IMPERATIVE THAT THE FLUE EXCEEDS AT LEAST 50 CM THE HIGHEST POINT OF THE ROOF CALLED THE "RIDGE" AND / OR HIGHER THAN 50 CM OF ANY OBSTACLE AROUND THE FLUE.

The chimney will be insulated and will never have a horizontal part according to the regulations in force.

Depending on the regulations in force in the geographical area concerned, it may be necessary to install particle filtration on the smoke evacuation network.

2.4 IRREGULARITIES IN OPERATION AND PRECAUTIONS

CAUSES AND SOLUTIONS

In the event of an electrical fault or fan malfunction, first make sure that:

- The power supply is correct.
- There are no voltage variations greater than + 10% or -15%.
- The fuses are in good condition.
- There is no shortage of solid fuel.

NOTE: Any repairs must be carried out by qualified technical personnel using original spare parts. It is forbidden to open or manipulate the components of the heater, with the exception of those provided for maintenance.

NEVER TURN ON THE HEATER WITHOUT INSTALLING THE FAN ASSEMBLY

NEVER DISCONNECT THE POWER WHEN THE APPLIANCE IS HOT

Since the thermal energy accumulated in the combustion chamber and the heat exchanger can damage the electric fan unit and the heat exchanger.

DO NOT TOUCH THE PARTS EXPOSED TO HEAT RADIATION IN PARTICULAR THE LOADING DOOR, THE FLUE EXIT AND ANY UNINSULATED FLUE.

WARNING :
It is imperative to keep a respectable distance when opening the hatch to avoid any risk of burns.

Any load greater than the maximum load corresponding to the power of the heater, i.e. 10 kg for FH50ECP and 20 kg for FH100ECP, irreparably implies overheating of the heater in the short term, which causes damage:

1 - The crack in the refractory brickwork

2 - Deformation of the floor cross members which support the S/S floor grid. This deformation gradually causing the impossibility of opening the ash drawer. Improper installation of the flue gas can cause the same damage caused by overheating of the lower part of the appliance due to the lack of draft.

3 - Deterioration of the steel or carbon heat exchanger tubes

4 - Perforation of the walls or heat exchanger tubes

5 - Deterioration of the high temperature coating

- **Ventilation in summer**

To obtain ventilation only from the heater, proceed as follows: Switch the inverter to the summer position.

2.5 MAINTENANCE:

For normal operation and proper aging of the heater over time, it is regulatory that qualified technical personnel carry out, at least once a year and preferably at the end of the season, annual maintenance operations, including including the sweeping of the flue. In the event of a claim, the insurance company will request the annual certificate of chimney sweeping carried out by a professional.

Any work on the heater must be carried out cold.

- **Cleaning the exchanger at the end of the season**

Proceed as follows:

- Unscrew the exchanger / fireplace assembly bolts
- Remove the exchanger
- Clean the outside of the heat exchanger tubes, if necessary by steam washing using a high pressure cleaner.
- Empty and clean the ash drawer
- Vacuum the soot in the combustion chamber, clean the brickwork
- Periodically replace damaged bricks (see spare parts list).

- **Maintenance of the flue gas pipe**

Disassemble the flue components and carefully sweep off any soot deposits.

- **Electric fan unit**

Blow out the inside of the motor with compressed air.
Use a brush and compressed air to clean the fan blades

2.6 **COMMISSIONING AND USE OF THE APPLIANCE:**

- **Use**

This heater is intended for the heating of industrial buildings, or others in compliance with legislation, safety and fire.
It cannot be installed in direct environmental contact with explosive agents (paints, solvents, etc.).

The heater must be installed in accordance with all standards and laws in force in the geographical area of use of the heater.

- **Firing refractory briquetting at first use**

When using for the first time, it is essential to carry out the briquetting firing procedure so that it takes on its refractory characteristics.
To do this, during the first commissioning,
Connect the fan to the 240V + T electrical network, load the fireplace to 30% of its capacity, i.e. around 3 to 4 kg with low-density wood, but with rapid combustion of species (wood from pallets, poplars, offcuts, wooden logs ...)
After the total combustion of this charge, repeat the operation with 50% of the charge (draft key open to the max.)

- **Commissioning after briquetting**

- Load the appliance with wood or any other non-polluting solid fuel (for FH50ECP with a maximum of 10kg, for wood, which represents a combustion of 50KW / for FH100ECP with a maximum of 20Kg, for wood, which represents a combustion of 100Kw)
- Connect the fan to the 240V + T electrical network.
- Light the selected wood or solid fuel.
- The fuel load must **never** exceed the rated power of the heater. Do not start the heater without connecting the fan to the electrical network.

After these 2 operations, the stove can be loaded normally.

Note: If these operations are not carried out, there is a risk of cracking certain elements of the brickwork.
CAUTION: never shock the briquetting at high temperature when filling (risk of cracking the briquetting elements).

- **Heater shutdown at the end of the season**

Disconnect the heater and carry out maintenance (Paragraph 9).

- **Fuel (concerns FH50ECP)**

The calorific value of dry wood is about 10 kg or (4.7 kW to 5.3kW per kg) 50 kW at 45/50 ° humidity.
The filling for 50 Kw is therefore 10Kg
Each time the wood heater is put into service, it must be lit with a first load of wood in order to obtain active embers
When reloading, it is possible to incorporate chips or chip brick. The compressed chip brick can be used for reloading. It is advisable to incorporate a briquette by validating the total load weight given the high calorific value of the reconstituted briquette.

10Kg of bricks = 50 Kw or 5 Kw per kg of bricks. A standard brick has an average weight of 1.8 kg, or 9 kW of energy.

2.7 **EXPLODED VIEW OF THE UNIT:**

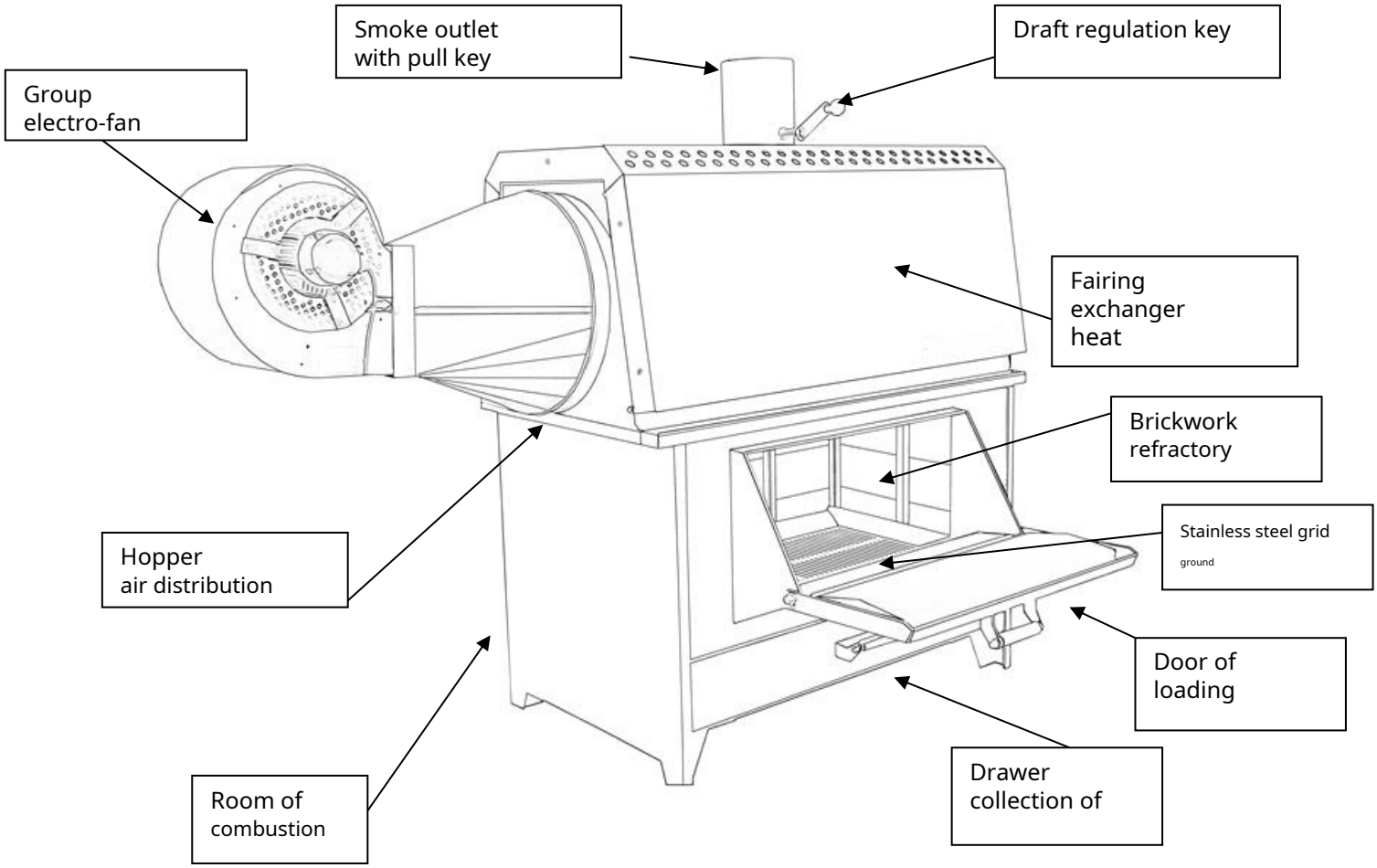

2.8 **DIMENSIONS:**

Model FH50ECP

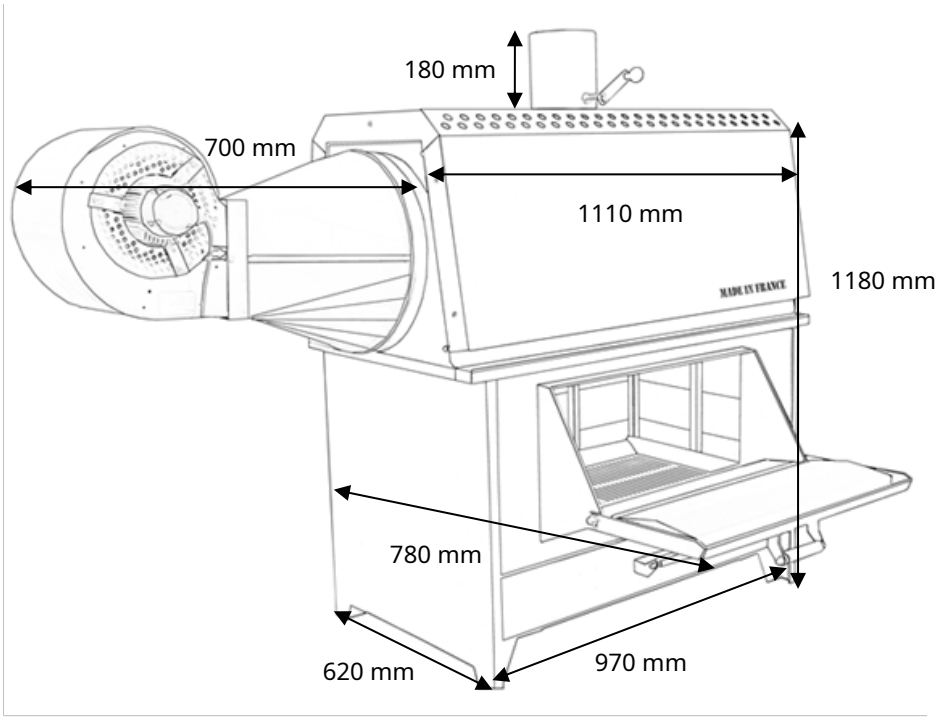

Model FH100ECP

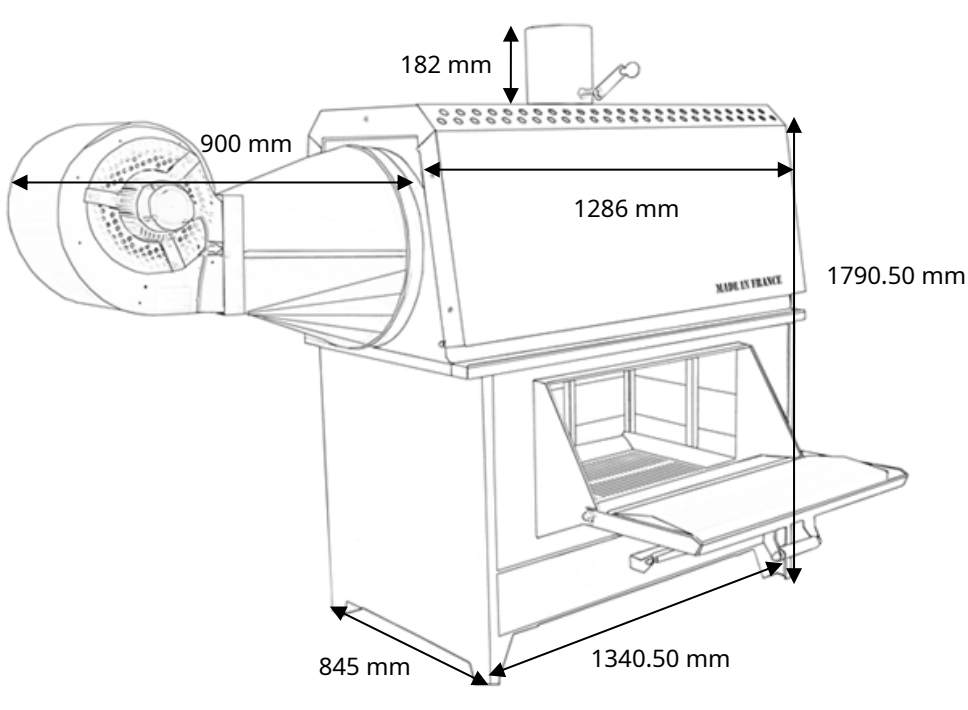

2.9 **DESCRIPTION, CABINET OPERATION (OPTIONAL) AND DIAGRAM**

The fan regulation allows the fan to be started up at the set temperature (i.e. around 30 ° C). As soon as the thermal heating circuit is at this temperature, the fan will start up (inverter in winter position). When the appliance cools down, the fan will stop at the set temperature in order to prevent the circulation of fresh air during the mass heating cycle.

Electrical cabinet

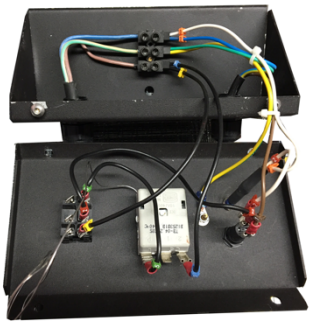

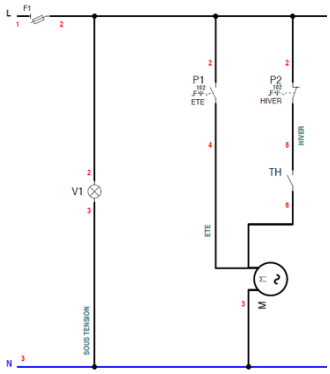

V1: Indicator voltage presence

P2: Inverter
Fan Only / On

Th: Thermostat fan

Description of the controller

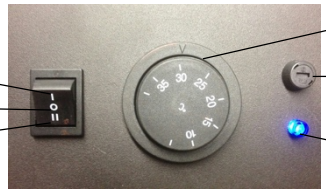

2.10 **POSITIONING OF THE ELECTRICAL CABINET AND THE PROBE**

Probe position thermostatic

Position behind the grid

Passage of the probe thermostatic

2.11 **FAN CABLE CONNECTION DIAGRAM**

In the 220 V mono motor connection box

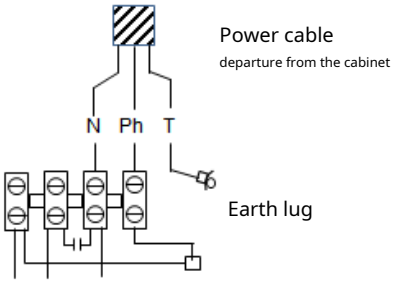

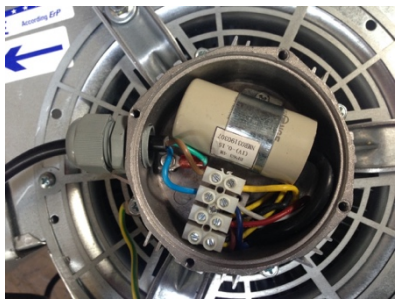

2.12 **DESCRIPTION AND OPERATION OF THE VISUAL THERMO CONTROL (OPTION)**

The visual thermo-control is a thermometer which allows to control the power produced according to the loading, that is to say 10 kg of wood for the model FH50ECP or 20 kg of wood for the model FH100ECP.

INDEED, AT FULL POWER, THE FLUE GAS TEMPERATURE IS AROUND 270° FOR A COMPLIANT CHIMNEY INSTALLATION WITH 2MM WATER COLUMN OF DRAUGHT / DEPRESSION.

Assembly

Position the thermometer in the housing provided for this purpose in the chimney nozzle

Functioning

As soon as the wood fuel is burnt, the flue gas temperature is indicated on the visual thermal control. The maximum power can be viewed by the red zone of the thermometer dial at 280°

In the event of overheating, spread the fuel in the fireplace and allow the temperature of the flue gases to drop below 270°

At 50% power, i.e. around 150 ° C, you can reload the wood heater with fuel to develop the maximum power, i.e. 5 kg for the FH50ECP or 10 kg for the FH100ECP, of additional fuel.

FLEXIHEAT UK LTD
www.flexiheatuk.com
01202 822221