INSTALLATION,
USE AND MAINTENANCE MANUAL

Condensing Air-Tight Gas Fired Heaters
with modulating pre-mixed gas burner

SERIES PMX - CMX

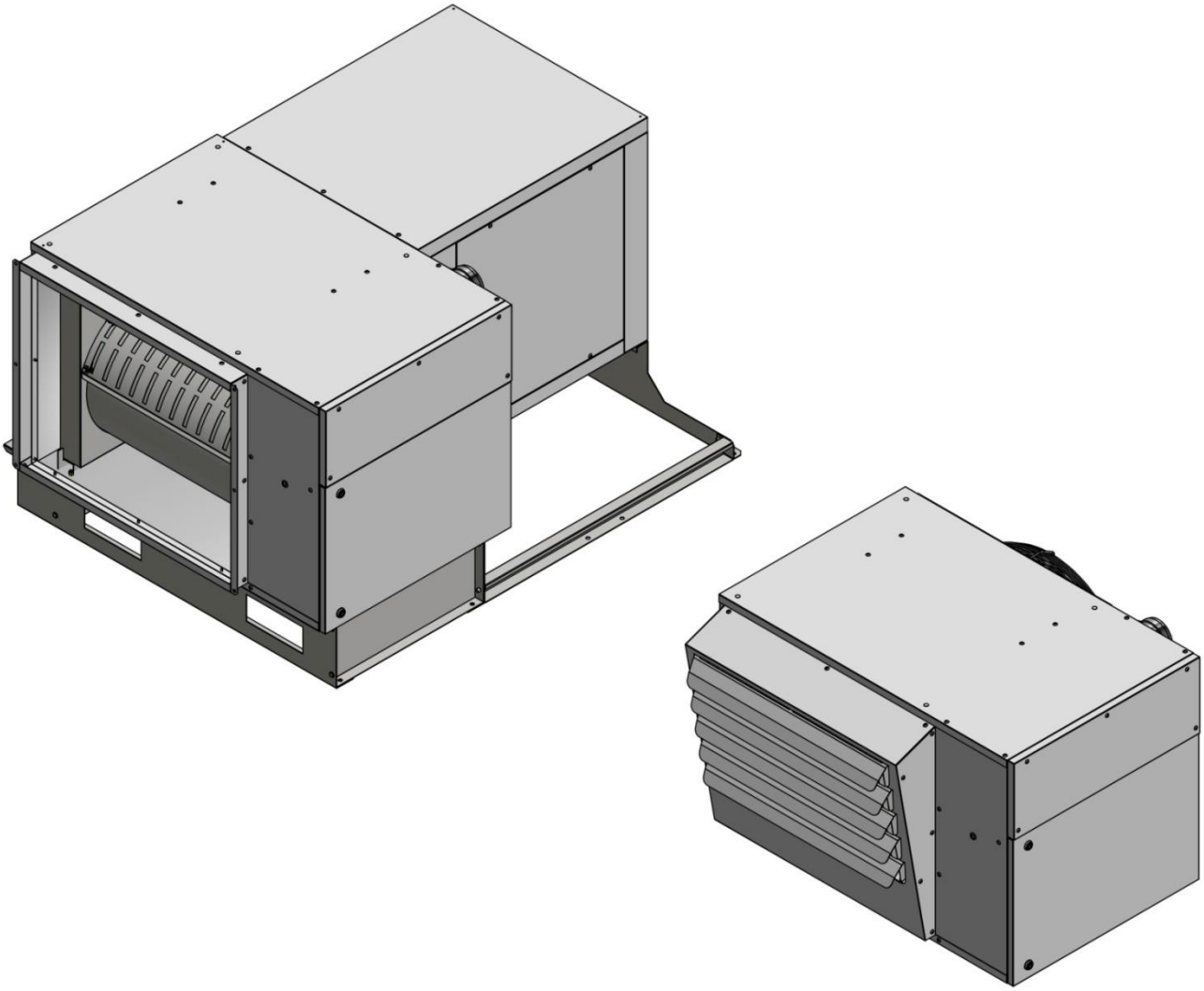

FLEXIHEAT UK LTD
Flexible Heating & Dehumidification Solutions
01202 822221
www.flexiheatuk.com

Dear Customer,

*Thank you for choosing an **PMX or CMX** series appliance, an innovative and modern, quality and high performance product which will assure safe and silent working for a long time; particularly if the appliance is serviced by a professional heating tecnician who are specially qualified and trained to keep it working at maximum efficiency with low running costs.*

*This instruction manual contains important instructions and suggestions for simple installation and making the best possible use of the **PMX and CMX** series appliance.*

Thank you.

Flexiheat UK Ltd

CONFORMITY

The hot air generator mod. PMX and CMX complies with:

- Machinery directive 2006/42/CE
- Low Voltage Directive 2014/35/CE
- Electromagnetic Compatibility Directive 2014//CE
- Regulation UE 2016/426 for Gas equipment

RANGE

This manual includes references to the **TYPE**. The following table shows the series and the correspondence between the **TYPE** and the **TRADE NAME**.

TYPE	ITEM NAME
0	PMX 15
1	PMX 30
2	PMX 40
3	PMX 50
4	PMX 60
5	PMX 90
6	PMX 120

TYPE	ITEM NAME
7	CMX 30
8	CMX 40
9	CMX 50
10	CMX 60
11	CMX 90
12	CMX 120
-	-

PMX = appliance with AXIAL fan for direct diffusion of air
CMX = appliance with centrifugal fan for channelled diffusion of air

WARRANTY

The **PMX and CMX** series appliances are covered by a **SPECIFIC WARRANTY**, starting from the equipment purchase date, which the user shall prove; otherwise, the warranty will start from the equipment manufacturing date. The warranty conditions are specified in the **WARRANTY CERTIFICATE**, provided together with the machine. We suggest reading it carefully.

DISPOSAL INSTRUCTIONS

Disposal of the appliance must be done by an authorized company and in compliance with the Local and Current Laws.
Before giving the waste to the Authorized Collection Centers, the various materials that compose it must be dismantled and separated:

- ferrous materials;
- aluminum;
- electric wire;
- seals;
- insulating materials;
- plastic materials;
- electronic boards.

INDEX

GENERAL INFORMATION

INSTRUCTIONS FOR INSTALLATION

INSTRUCTIONS FOR THE USER

INSTRUCTIONS FOR ASSISTANCE AND MAINTENANCE

In the manual, the following symbols are used:

⚠ **WARNING =** for operations requiring **SPECIAL CARE** and **SUITABLE PREPARATION**

⛔ **FORBIDDEN** = operations that **MUST NOT** be performed, in any case

GENERAL REMARKS

⚠

This manual is an integral part of the machine, therefore it should always be carefully kept and it should always be provided together with the machine, if it is transferred to another owner or user. If this manual is damaged or lost, a new one should be asked to the local Technical Assistance Service or to the Producer.

The installation of the appliance has to be performed by a qualified company that, at the end of the work, must give the owner a declaration of conformity of the installation, performed according to the manual, that is in compliance with the National and Local Standards in force and the instructions provided by the Manufacturer in this instruction booklet.

This appliance has been manufactured for room heating and it must be used for this purpose, compatibly with its performance characteristics.

Any contractual or extra-contract liability of the Producer in respect of damages caused to people, animal or things by a non correct installation, setting or maintenance or by the improper use of the machine is excluded.

If the temperature is too high, it might harm people's health and it is a pointless waste of energy.

Do not leave the rooms closed for a long time. Periodically open the windows to ensure proper ventilation.

During the initial start-up, there may be the formation of odours and fumes due to the evaporation of the liquid added to protect the heat exchanger during storage; this is normal and it will disappear after a short period. It is recommended to suitably ventilate the room.

If you will not be using the unit for long periods, carry out the following operations:

- turn the main switch of the unit and the general switch of the plant to "OFF";
- close the main fuel supply valve.

In case of long periods during which the equipment is not operated, it is recommended to contact either After-Sales Technical Assistance Service or anyhow professionally qualified personnel for its new start-up.

The machine shall be fitted only with original accessory equipment. The manufacturer shall not be held responsible for any damage deriving from improper use of the unit or from the use of non-original materials and accessories.

References to Laws, Regulations, Directives and Technical Rules mentioned in this manual are provided only for information purposes and as they are in force when the manual is printed. The entry into force of new provisions or amendments to current laws does not represent an obligation of the manufacturer towards third parties.

Repairs or maintenance must be performed by the Technical Assistance Service or by qualified personnel in accordance with this manual. Do not modify or tamper with the appliance as dangerous situations can be created and the manufacturer will not be liable for any damage caused.

The systems that are to be carried out (gas pipes, power supply, etc,) must be suitable secured and must not be dangerous with the risk of tripping.

The Producer is responsible for the product compliance with Laws, Directives or Construction Rules in force when the product is marketed. The knowledge and observance of the laws and standards regarding plant design, installation, operation and maintenance are the sole responsibility of the designer, installer and user.

The Producer shall not be held responsible for failure to comply with the instructions of this manual, for the consequences of any operations carried out and not specifically provided for or for translations open to misinterpretation.

A variable thermal power operation is provided also in the event of combustion products condensate.

This equipment shall be installed according to applicable Standards and be used only in a sufficiently ventilated ambient. Read the instructions before installing and using this appliance.

MAIN SAFETY RULES

Bear in mind that if you use products powered trough electric power, gas, etc., you should comply with some basic rules, such as:

- This device cannot be used by people (including children) with reduced physical, sensory or mental abilities or lack of experience and knowledge, unless they are supervised or trained on the use of the unit by the person who is responsible for its safety.
- Do not touch the unit barefoot or when parts of the body are wet or damp.
- It is forbidden to wet the hot air heater with water or other liquids.
- The exhaust duct should not be touched, since during normal operations it might reach high temperatures, being therefore dangerous to be touched.
- No object should be placed over the machine nor inserted through its case grill or through the combustion product exhaust ducts.
- The burner should not be installed outdoor and should not be directly exposed to harsh weather conditions.
- The hot air heater must not be directly installed in small areas lacking proper ventilation, since the air suction might cause a remarkable depression within the room, causing serious problems.
- Do not install the appliance near flammable material, or in rooms with an aggressive atmosphere.
- Do not operate electrical devices such as switches, electrical appliances, etc. if you can smell fuel.
  In this case:
  - ventilate the room by opening doors and windows;
  - close the fuel control device;
  - promptly request the intervention of the Technical Assistance Service or of skilled personnel.
- Do not clean or perform maintenance before disconnecting the unit from the electrical power supply by turning the main switch of the system to "OFF", and shutting-off the fuel.
- Do not modify the safety or adjustment systems without authorization and the instructions of the manufacturer of the unit.
- Do not open the access doors to the inside of the unit, without turning the main switch of the unit to "OFF".
- Do not use adaptors, power strips and extension cables for the electrical connection of the unit.
- Do not install the unit beyond the limits of use and operation shown in the instruction manual.
- Do not pull, disconnect and twist the electrical cables coming from the unit, even if it is disconnected from the electrical power supply.
- Do not dispose of, abandon or leave within the reach of children, the packaging materials (cardboard, staples, plastic bags, etc.), as they may be potentially dangerous.
- It is forbidden to distribute the product in Countries, differing from the one for which it has been arranged, as amendments must be carried out in the documentation and in the set-up.
- It is forbidden to preserve the documentation inside the appliance, as it represents a potential fire and/or obstruction danger for air passage.

IDENTIFICATION

The appliances can be identified by means of:

- the **technical plate**, applied on the machine, specifying the main technical-performance data;
- the **packaging label**, applied on the outside.

CAUTION!!!

If the **technical plate** is damaged or lost, request a duplicate to the Technical Assistance Service.

ACCESSORIES

A whole series of specific accessories are available upon request. To install them, follow the instructions included in the relevant package.

⚠ **CAUTION!!!**

Optionals, kits and accessories must exclusively be original products.

RECEIVING THE PRODUCT

The appliance is supplied with:

- Document envelope including:
  - Use, installation and maintenance manual;
  - Warranty certificate;
  - Gas conversion kit;
  - Labels with barcode;
- Condensate drain syphon.

OPERATING PRINCIPLE SCHEME

The premixed gas burner fan (**1**) sucks the optimal combustion gas mix (**GAS**) and comburent air (**AR**); in the correct quantities, assured by the mixer and by the modulating gas solenoid valve (**2**).
Inside the feeding screw of the fan of the premixed burner (**1**), there is a further mixing of the fuel (**GAS**) with the comburent air (**AR**); such mixture is then input in the burner tube. On the external surface of the burner tube, a radial flame develops.
Combustion products (**SM**), before being ejected via the stack fitting, heat up respectively the combustion chamber (**3**), the rear smoke manifold (**4**), the smoke pipes (**5**) and the front smoke manifold (**6**).
The temperature of the combustion products, during the crossing of the smoke pipes (**5**) **lowers under the dew point, retrieving the latent energy contained in the water vapour normally generated in a combustion process**. **The condensation (CS) produced is collected in the front smoke manifold** (**6**) **and released outside.**

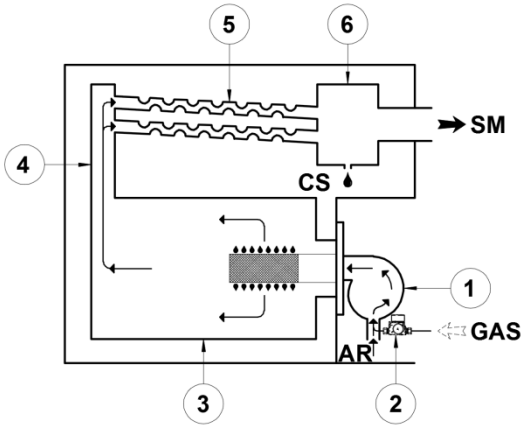

EFFICIENCY

The hot air heater has been designed for the heating of industrial and commercial premises. The appliance is characterised by operation with variable thermal capacity and continuous modulation, controlled automatically by a remote control panel with built-in remote ambient temperature probe. It allows fast pre-heating of the premises, ensures constant temperature with no variations and lower heating costs.

Thanks to the continuous modulation of the thermal capacity, upon decreasing of the heat demand, the hot air heater reaches efficiency values up to 106 %, consuming though less gas. Here below is the chart, showing the relation between the thermal power issued and the total yield for all types of appliance:

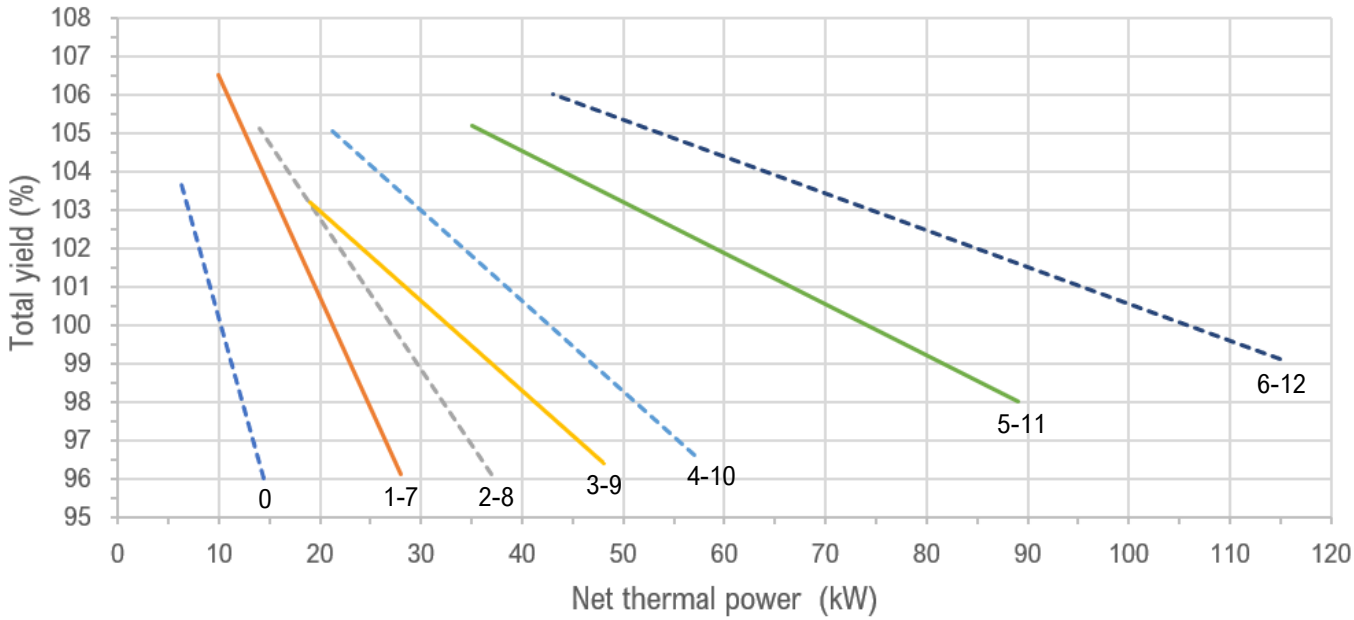

Reading example of the above chart:
During operation at a thermal power of **65 kW**, the total yield of the appliances TYPE 6 and 12 is about 104%.

PREMIXED GAS BURNER

The thermal gradient from the premixed burner is of the modulating type and with a high adjustment range (from 100% to 30%). The gas valve delivers the fuel in relation with the combustion air flow rate according to a default factory setting. The concentration of carbon dioxide (CO_2), unlike atmospheric burners, is more or less constant on the whole work range, allowing to increase the yield as the thermal gradient released decreases. A perfect mixing of the fuel gas with the combustion air combined with a semi-radiant flame, contributes to obtain a hygienic combustion with very low emissions of carbon monoxide (CO) and nitrogen oxides (NOx).
In case of reduction of the comburent air (e.g. obstructions and/or head losses of the smoke exhaust and comburent air suction ducts), the solenoid valve automatically reduces the gas, keeping the combustion parameters at optimal levels. In case of poor comburent air, the solenoid valve closes and no more gas is supplied.

The drawing refers to the types 3 to 9:

1. Ignition electrode;
2. DC Brushless fan;
3. Gas-air control gas solenoid valve;
4. Mixer;
5. Ionization electrode;
6. Burner plate with thermal insulation;
7. Tubular coated with metal fibre mesh.

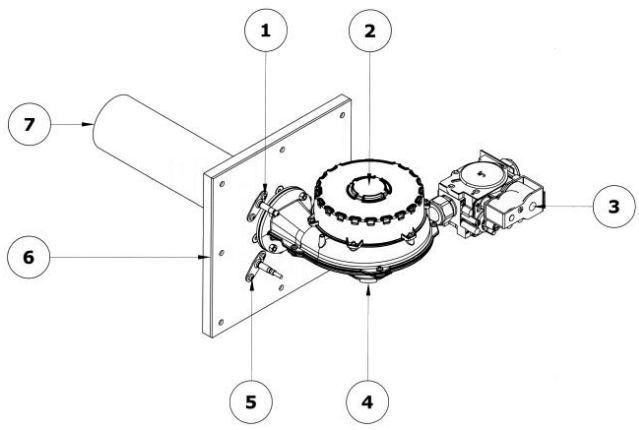

IDENTIFICATION OF MAIN COMPONENTS

The drawing refers to the type 3

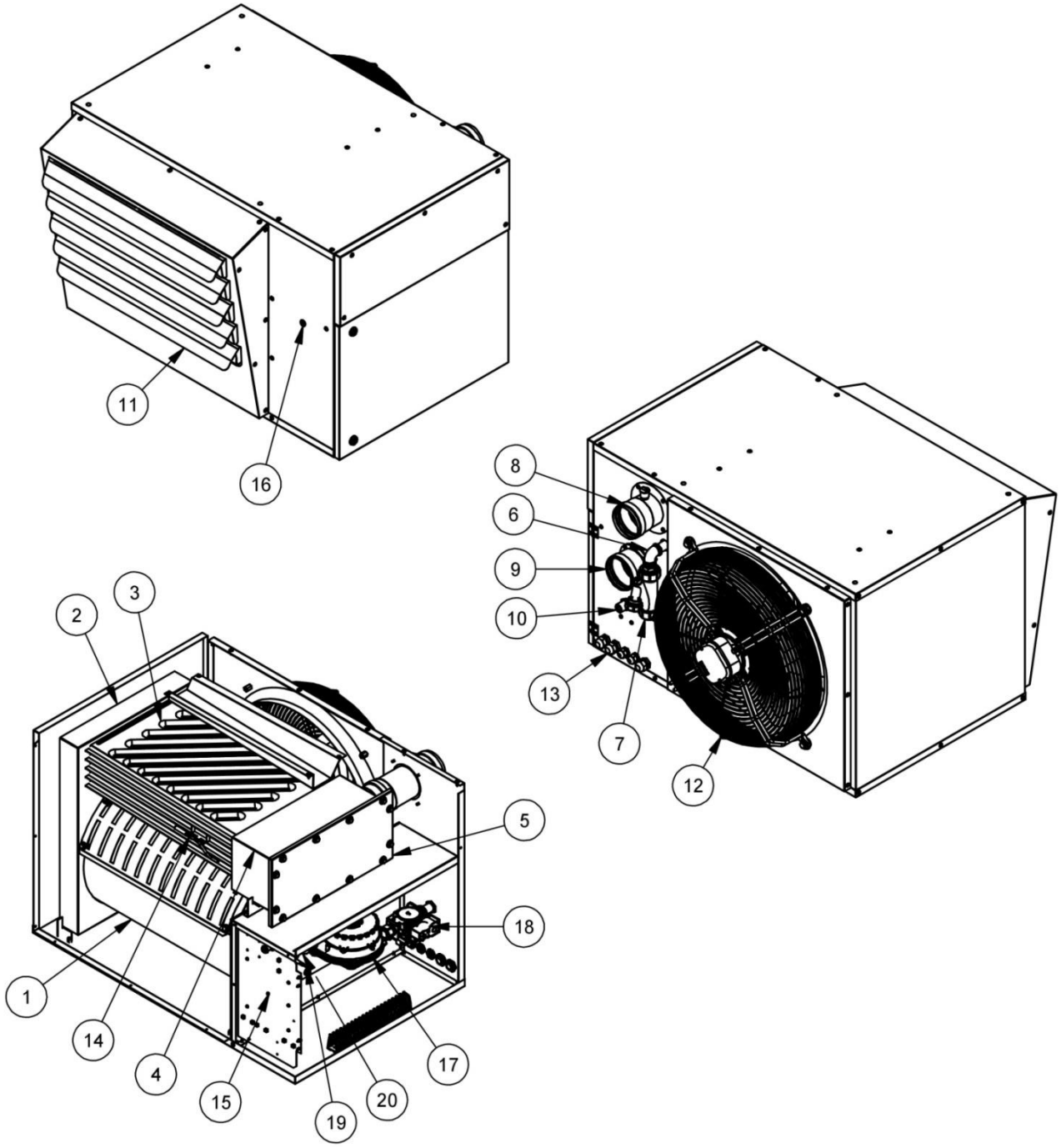

1. Combustion chamber.
2. Rear fume manifold.
3. Fume pipes.
4. Front fume manifold.
5. Front fume manifold inspection hatch.
6. Condensate drainage connector.
7. Condensate drain syphon.
8. Exhaust fumes coupling with fume analysis vent.
9. Combustion air suction connection.
10. Gas inlet connection
11. Supply panel with adjustable wings.
12. AXIAL fan.
13. Cable glands for electrical connections.
14. Multifunctional fan probe.
15. Electronic board.
16. Multifunctional warning light.
17. Pre-mixed burner fan.
18. Gas Solenoid valve.
19. Ignition electrode.
20. Ionization electrode.

The drawing refers to the type 9

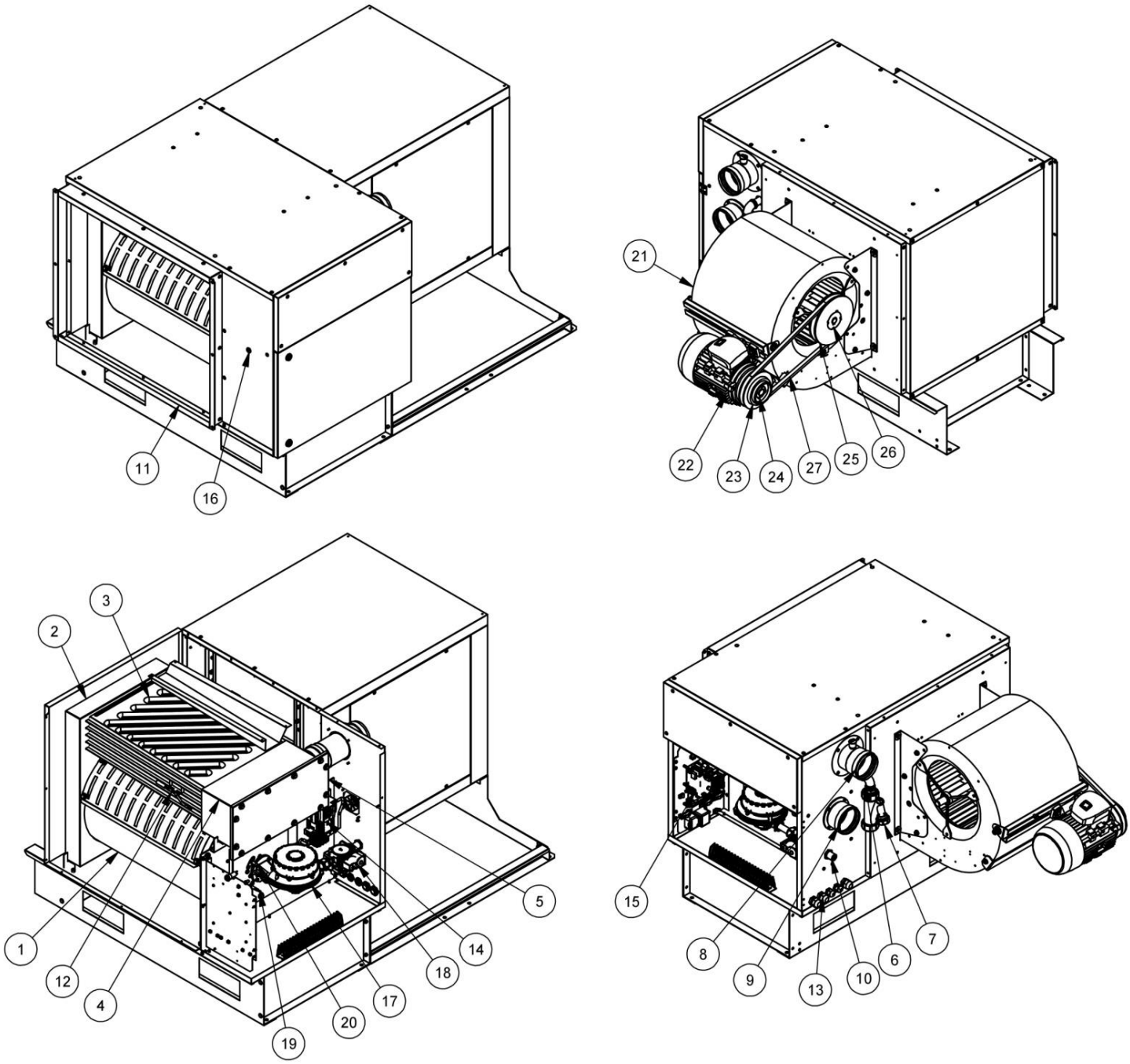

1. Combustion chamber.
2. Rear fume manifold.
3. Fume pipes.
4. Front fume manifold.
5. Front fume manifold inspection hatch.
6. Condensate drainage connector.
7. Condensate drain syphon.
8. Exhaust fumes coupling with fume analysis vent.
9. Combustion air suction connection.
10. Gas inlet connection
11. Inlet flange
12. Multifunctional fan thermostat
13. Cable glands for electrical connections.
14. Three-phased control panel
15. Electronic board.
16. Multifunctional warning light.
17. Pre-mixed burner fan.
18. Gas Solenoid valve.
19. Ignition electrode.
20. Ionization electrode.
21. Centrifugal fan.
22. Fan motor
23. Engine pulley
24. Motor pulley bushing
25. Fan pulley
26. Fan pulley bushing
27. Cycle

TECHNICAL SPECIFICATIONS

DESCRIZIONE	U	TYPE 0		TYPE 1-7		TYPE 2-8		TYPE 3-9	
		Max	Min	Max	Min	Max	Min	Max	Min
Thermal capacity 1	kW	15,0	6,0	29,1	9,4	38,5	13,3	49,8	18,4
(burned)	kcal/h	12.900	5.160	25.057	8.075	33.111	11.456	42.822	15.833
Heat capacity [1]	kW	14,4	6,2	28,0	10,0	37,0	14,0	48,0	19,0
(utile)	kcal/h	12.380	5.330	24.080	8.600	31.820	12.040	41.280	16.340
Total yield [2]	%	96,0	103,8	96,1	106,5	96,1	105,1	96,4	103,2
Condensation produced [3]	l/h	0,01	0,5	0,2	1,1	0,3	1,3	0,3	1,5
Air flow rate	m³/h	1.600		3.200		4.400		5.500	
Air thermal gradient (ΔT)	K	26	11	26	9	25	9	26	10
Smoke exhaust available	mbar	4		10		19		11	
Class NOx [5]		5		5		5		5	
Use									
temperature	°C	-15 ÷ +40							
non-condensing relative humidity	Rh	75							
Appliance type		$B_{23} – B_{23P} – C_{13} – C_{33} – C_{63}$							
Country of destination		GREAT BRITAIN - (GB)							
max. instantaneous consumption									
Methane G20	Nm³/h	1,6	0,6	3,1	1,0	4,1	1,4	5,3	1,9
Methane G25	Nm³/h	1,8	0,7	3,6	1,2	4,7	1,6	6,1	2,3
Propane G31	Nm³/h	0,6	0,2	1,2	0,4	1,6	0,5	2,0	0,8
Methane G27	Nm³/h	2,0	0,8	3,9	1,2	5,1	1,8	6,6	2,4

DESCRIPTION	U	TYPE 4-10		TYPE 5-11		TYPE 6-12		-	
		Max	Min	Max	Min	Max	Min	-	-
Thermal capacity 1	kW	59,0	20,0	90,8	33,3	116,0	40,6	-	-
(burned)	kcal/h	50.745	17.184	78.102	28.612	99.760	34.887	-	-
Heat capacity [1]	kW	57,0	21,0	89,0	35,0	115,0	43,0	-	-
(utile)	kcal/h	49.020	18.060	76.540	30.100	98.900	36.980	-	-
Total yield [2]	%	96,6	105,1	98,0	105,2	99,1	106,0	-	-
Condensation produced [3]	l/h	0,3	1,9	1,6	3,3	2,7	4,3	-	-
Air flow rate	m³/h	6.500		10.000		13.000		-	
Air thermal gradient (ΔT)	K	26	10	26	10	26	10	-	-
Smoke exhaust available	mbar	14		11		17		-	
Class NOx [5]		5		5		5		-	
Use									
temperature	°C	-15 ÷ +40							
non-condensing relative humidity	Rh	75							
Appliance type		$B_{23} – B_{23P} – C_{13} – C_{33} – C_{63}$							
Country of destination		GREAT BRITAIN - (GB)							
max. instantaneous consumption									
Methane G20	Nm³/h	6,2	2,1	9,6	3,5	12,3	4,3	-	-
Methane G25	Nm³/h	7,3	2,5	11,2	4,1	14,3	5,0	-	-
Propane G31	Nm³/h	2,4	0,8	3,7	1,4	4,7	1,7	-	-
Methane G27	Nm³/h	7,8	2,6	12,0	4,4	15,4	5,4	-	-

VERSION WITH AXIAL FAN									
DESCRIPTION	**U**	**TYPE 0**		**TYPE 1**		**TYPE 2**		**TYPE 3**	
		Max	**Min**	**Max**	**Min**	**Max**	**Min**	**Max**	**Min**
Power supply		230V ~ 50Hz 1Ph+N							
Protection Degree									
Hot air heater	IP	40							
Axial fan	IP	54		54		54		54	
Axial fan									
Quantity	Nr	1		1		1		2	
Polarity	Nr	6		4		4		4	
Total electrical current	A	0,33		0,82		1,40		1,64	
Total electrical power	kW	0,08		0,17		0,31		0,34	
Condenser	µF	3,15		6,3		8,0		6,3	
Sound emission									
Sound pressure (Lp) [6]	dB(A)	48		53		55		56	
Air delivery [7]	m	14		20		28		32	

VERSION WITH AXIAL FAN									
DESCRIPTION	**U**	**4**		**5**		**6**		**-**	
		Max	**Min**	**Max**	**Min**	**Max**	**Min**	**-**	**-**
Power supply		230V ~ 50Hz 1Ph+N				400V ~ 50Hz 3Ph+N			
Protection Degree									
Hot air heater	IP	40							
Axial fan	IP	54		54		54		-	
Axial fan									
Quantity	Nr	2		2		2		-	
Polarity	Nr	4		6		6		-	
Total electrical current	A	1,8		3,0		1,84		-	
Total electrical power	kW	0,4		0,66		0,74		-	
Condenser	µF	6,3		6,3		-		-	
Sound emission									
Sound pressure (Lp) [6]	dB(A)	57		56		60		-	
Air delivery [7]	m	35		39		42		-	

1) G20 methane gas Hi = 34.02 MJ/Nm3
   Methane gas G25: Hi = 29.25 MJ/Nm3
   Propane gas G31: Hi = 88.00 MJ/Nm3
2) Referred to lower heat power (Hi) with latent vaporization heat recovery.
3) Indicative variable value depending on the environmental conditions.
4) Maximum pressure available at the max thermal capacity before the stop of the burner.
5) Reference Standard UNI EN 1020 with methane gas G20.
6) Measured in free field at 6 metres distance.
7) Referred to air temperature +20°C – residual speed 0.2 m/s.

VERSION WITH CENTRIFUGAL FAN									
DESCRIPTION	**U**	**TYPE-0**		**TYPE-7**		**TYPE-8**		**TYPE-9**	
		Max	**Min**	**Max**	**Min**	**Max**	**Min**	**Max**	**Min**
Power supply		400V ~ 50Hz 3Ph+N							
Protection degree									
Hot air heater	IP	40							
Centrifugal fan motor	IP	-		55		55		55	
Centrifugal degree									
Version		-		Single		Single		Double	
Size	-	-		10-10		10-10		10-8	
Fan motor		Version with static pressure 200 Pa							
Fan motor power	kW	-		0,75		1,1		1,1	
Max current	A	-		1,79		2,5		2,5	
Fan motor		Version with static pressure 450 Pa							
Fan motor power	kW	-		1,1		1,5		1,5	
Max current	A	-		2,5		3,2		3,2	

VERSIONE WITH CENTRIFUGAL FAN									
DESCRIPTION	**U**	**TYPE-10**		**TYPE-11**		**TYPE-12**		**-**	
		Max	**Min**	**Max**	**Min**	**Max**	**Min**	**-**	**-**
Power supply		400V ~ 50Hz 3Ph+N							
Protection degree									
Hot air heater	IP	40							
Centrifugal fan motor	IP	55		55		55		-	
Centrifugal degree									
Version		Double		Double		Double		-	
Size	-	10-8		15-11		15-11		-	
Fan motor		Version with static pressure 200 Pa							
Fan motor power	kW	1,5		1,5		3,0		-	
Max current	A	3,2		3,2		6,2		-	
Fan motor		Version with static pressure 450 Pa							
Fan motor power	kW	2,2		2,2		4,0		-	
Max current	A	4,7		4,7		8,1		-	

INFORMATION REQUIREMENTS 2016/2281

TYPE	U	0	1-7	2-8	3-9	4-10	5-11	6-12
Type of installation:		B_{23} – B_{23P} – C_{13} – C_{33} – C_{63}						
Type of fuel:		Gaseous						

Capacity:								
$P_{rated,h}$	kW	14,4	28,0	37,0	48,0	57,0	89,0	115,0
P_{min}	kW	6,2	10,0	14,0	19,0	21,0	35,0	43,0

Useful efficiency: [1]								
η_{nom}	%	86,4	86,5	86,5	86,7	86,1	88,2	89,2
η_{pl}	%	93,4	95,8	94,6	92,9	94,6	94,7	95,4

Electric power consumption:								
el_{max}	kW	0,08	0,08	0,08	0,08	0,08	0,207	0,207
el_{min}	kW	0,05	0,05	0,05	0,05	0,05	0,15	0,15
el_{sb}	kW	0,005	0,005	0,005	0,005	0,005	0,008	0,008

Other items:								
F_{env}	%	0	0	0	0	0	0	0
P_{ign}	kW	-	-	-	-	-	-	-
$\eta_{s,flow}$	%	95,46	96,1	96,1	95,8	96	95,8	95,9
$\eta_{s,h}$	%	86,18	89,9	88,8	87,1	89	88,6	89,7

1) Refferd to the high heating value (Hs):
   - **Gas** : gas G20 (37,78 MJ/Nm³);

Definitions:

$P_{rated,h}$	Rated heating capacity
P_{min}	Minimum heating capacity
η_{nom}	Useful efficiency at rated heating capacity
η_{pl}	Useful efficiency at minumum capacity
el_{max}	At rated heating capacity
el_{min}	At minimal capacity
el_{sb}	In standby mode
F_{env}	Envelope loss factor
P_{ign}	Ignition burner power consumption
$\eta_{s,flow}$	Emission efficiency
$\eta_{s,h}$	Seasonal space heating energy efficiency

Note:

The data in the table is referred to the high heating value of the fuel (H_s), nominal air flow rate and a 15 mm of mineral wool.

DIMENSIONS AND WEIGHT

The drawing refers to the TYPE 2:

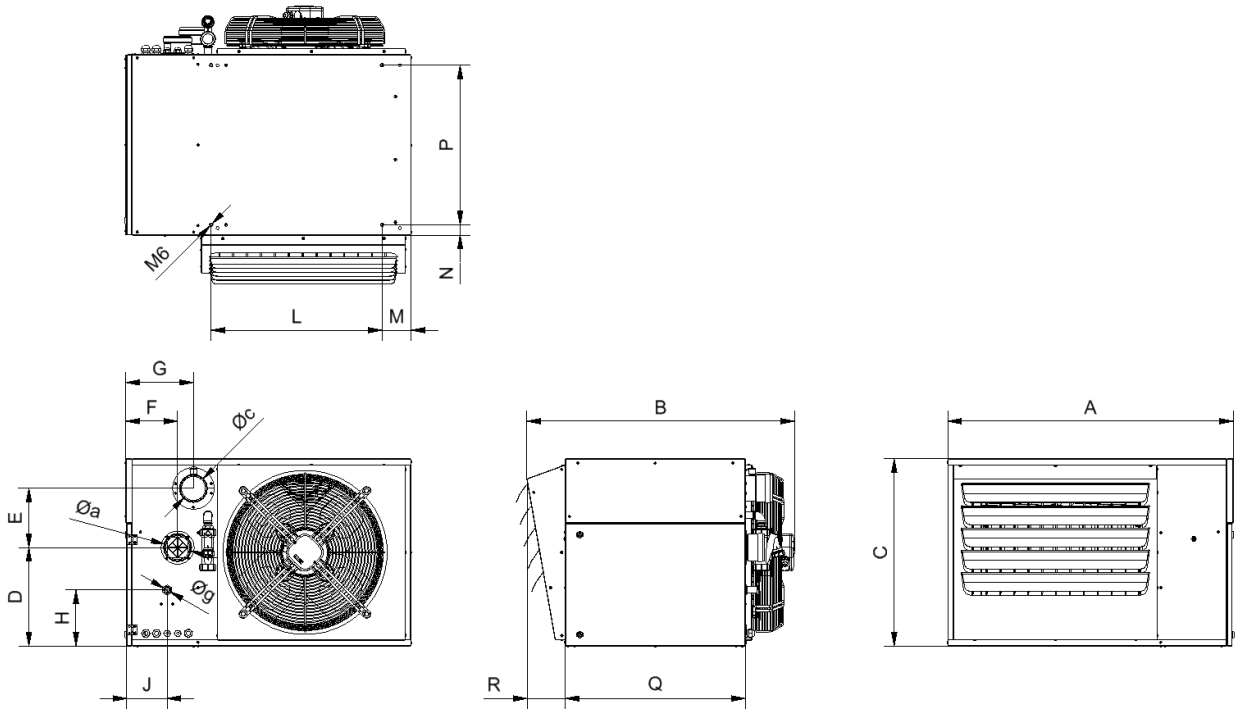

Dimensions and weights chart:

TYPE	Unit	0	1	2	3	4	5	6
A	mm	885	885	885	1.225	1.225	1.775	1.775
B	mm	830	830	830	896	896	1.081	1.081
C	mm	580	580	580	650	650	800	800
D	mm	305	305	305	344	344	380	380
E	mm	185	185	185	185	185	190	190
F	mm	160	160	160	115	115	117	117
G	mm	210	210	210	160	160	133	133
H	mm	174	174	174	200	200	200	200
J	mm	125	125	125	125	125	106	106
L	mm	530	530	530	840	840	840	840
M	mm	90	90	90	104	104	104	104
N	mm	32	32	32	40	40	40	40
P	mm	495	495	495	530	530	530	530
Q	mm	560	560	560	610	610	710	710
R	mm	118	118	118	131	131	156	156
Øc female (chimney)	mm	80	80	80	80	80	100	100
Øa female (ari suction)	mm	80	80	80	80	80	100	100
Øg male (combustible gas)	pollici	1/2 G	1/2 G	1/2 G	1/2 G	1/2 G	3/4 G	3/4 G
NET WEIGHT	kg	~ 63	~ 65	~ 75	~ 90	~ 95	~ 205	~ 215

The drawing refers to the TYPE 8:

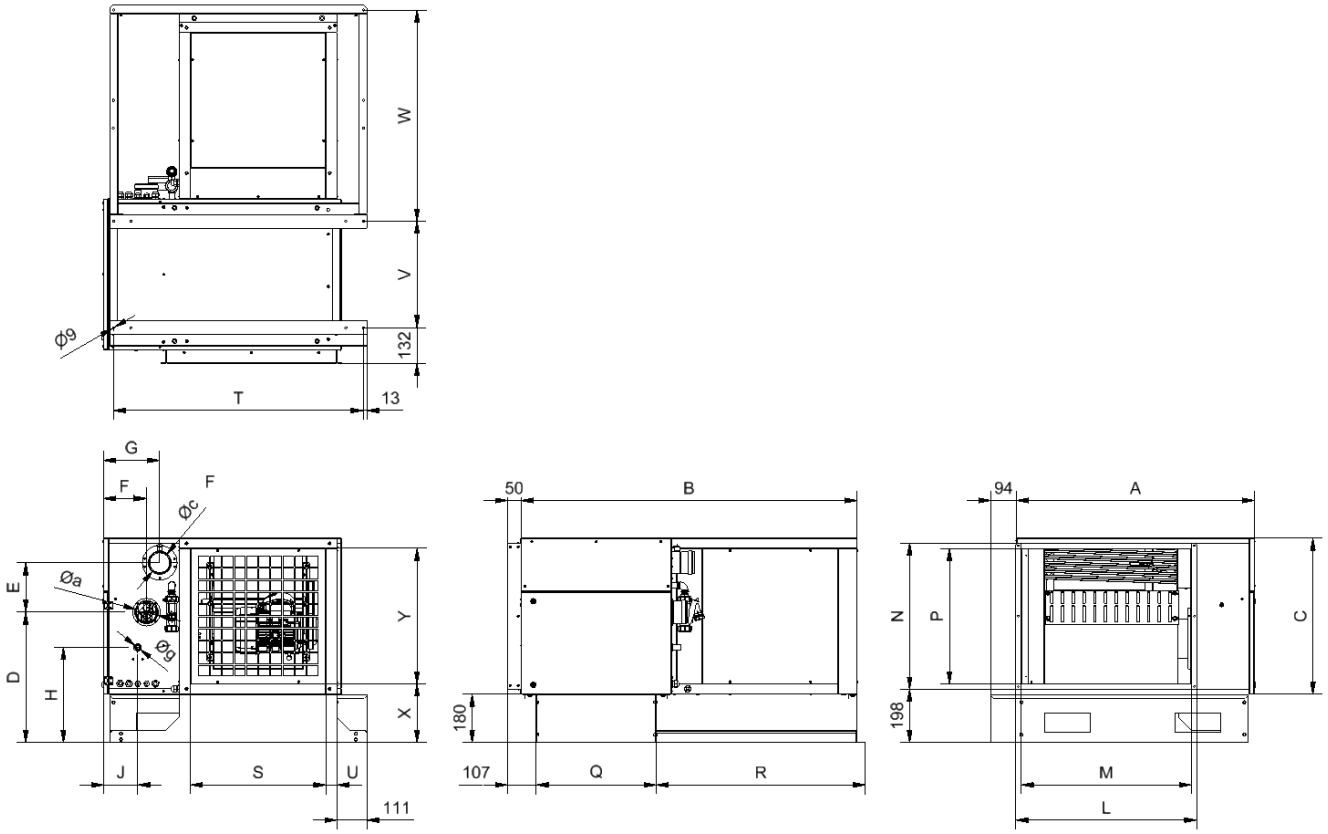

Dimensions and weights chart:

TYPE	Unit	7	8	9	10	11	12
A	mm	885	885	1.225	1.225	1.775	1.775
B	mm	1250	1250	1400	1400	1600	1600
C	mm	580	580	650	650	800	800
D	mm	305	305	524	524	559	559
E	mm	183	183	185	185	190	190
F	mm	160	160	115	115	117	117
G	mm	210	210	159	159	133	133
H	mm	215	215	213	213	243	243
L	mm	673	673	1016	1016	1536	1536
M	mm	633	633	976	976	1496	1496
N	mm	543	543	613	613	763	763
P	mm	503	503	573	573	723	723
Q	mm	446	446	496	496	596	596
R	mm	777	777	827	827	977	977
S	mm	504	504	901	901	1401	1401
T	mm	929	929	1269	1269	1822	1822
U	mm	40	40	40	40	49	49
V	mm	396	396	446	446	546	546
W	mm	785	785	835	835	985	985
X	mm	218	218	250	250	275	275
Y	mm	504	504	510	510	610	610
J	mm	129	129	127	127	107	107
∅ a (air suction) female	mm	80	80	80	80	100	100
∅ c (chimney) female	mm	80	80	80	80	100	100
∅ g (combustibile gas) male	inches	1/2 G	1/2 G	1/2 G	1/2 G	3/4 G	3/4 G
NET WEIGHT	kg	117	120	162	170	295	312

FLUE DUCT PRESSURE DROPS AND COMBUSTION AIR INTAKE

The premixed burner has an high pressure available, and regulate itself to the type of flue duct and combustion air intake that is installed.

The components that make up a line of smoke discharge and combustion air intake have their own pressure drop, when applied to the device cause inevitably decrease the burner fan airflow, but the system reacts instantly on the amount of injected gas and ensure an optimum air/gas mixture and a clean combustion.

To properly size the exhaust fumes and combustion air intake is recommended to proceed as follows:

- Determine the configuration of the flue and air intake ducts according to the particular installation;
- Using the table below, do the sum of the pressure drops of each components;
- Verify that the sum of pressure drop does not exceed the value of the "**Available pressure at chimney**", that corresponds to an operation with a modest limitation (under 5%) of the maximum thermal capacity

Table pressure drops of components flue duct and air intake combustion:

TYPE		0	1-7	2-8	3-9	4-10	5-11	6-12
Available pressure at chimney	**Pa**	**25**	**110**	**290**	**160**	**270**	**190**	**190**
Maximum pressure at chimney	Pa	330	1.000	1.900	1.100	1.400	1.100	1.700
Component:		PRESSURE DROP						
- Tube ∅ 80 mm (1 m)	Pa	0,5	1,6	2,9	4,5	5,9	-	-
- Tube ∅ 100 mm (1 m)	Pa	-	-	-	-	-	3,5	5,9
- Curve ∅ 80 mm 90°	Pa	0,4	1,4	2,4	3,7	4,9	-	-
- Curve ∅ 100 mm 90°	Pa	-	-	-	-	-	3,6	6,3
- Curve ∅ 80 mm 45°	Pa	0,2	0,7	1,2	1,8	2,4	-	-
- Curve∅ 100 mm 45°	Pa	-	-	-	-	-	1,8	3,1
- Terminal ∅ 80 mm	Pa	0,4	1,2	2,2	3,5	4,8	-	-
- Terminal ∅ 100 mm	Pa	-	-	-	-	-	2,1	3,7

⚠ **If the pressure drop of the ducts and flue gas combustion air intake is higher than the value of "available pressure at chimney", but less than the value of "Maximum pressure at chimney", the device will still work, but with greater limitation of maximum thermal capacity.**

INSTRUCTIONS FOR INSTALLATION

The instructions on the installation and adjustment of the appliance are reserved to qualified personnel only. Read the safety warnings.

TRANSPORTATION AND HANDLING

The hot air heater is supplied fixed on a wooden bench, in a cardboard box adequately secured. Handling must be performed by properly equipped personnel. If a fork-lift is used, pitchfork the machine in the lower part using the appropriate ways in the wood bedplate.

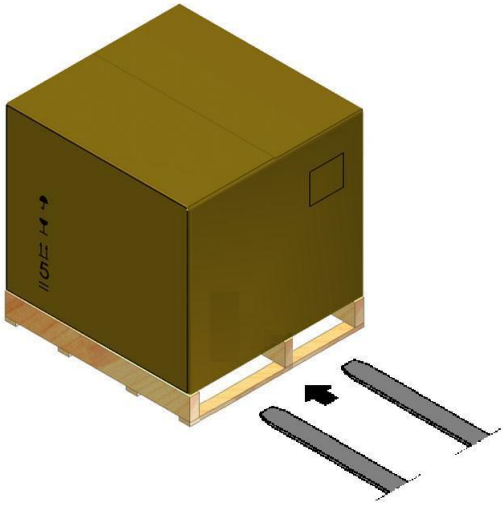

CAUTION!!!

Shipping and handling must be carried out with extreme care, so as to avoid damage to the unit and danger to the people involved.

After unpacking the product, check the integrity and wholeness of the content. If not, contact the Agency that sold the unit.

During transportation and handling, it is forbidden to stand near the unit.

Use forklift forks with a minimum length equal to the width of the machine.

Should it be necessary to place more than one unit on top of each other, observe the index indicated on the packaging itself and be very careful when aligning the packages so as not to create unstable stacks.

If the device needs to be moved by hand, make sure that there is enough workforce available in proportion with the weight indicated in the section "**Dimensions and weight**" and depending on the distance to cover.

It is recommended to use Personal Protective Equipment.

INSTALLATION PLACE

The location for the unit must be determined by the system designer or a competent person and it must take into account the technical requirements and the standards and regulations in force; generally, special permissions need to be obtained. (e.g.: regulations concerning zoning, architecture, fires, environmental pollution, noise emission, etc.)
It is therefore advisable, before installing the unit, to request and obtain the necessary permissions.

CAUTION!!!

To allow proper draining of the condensate, it is MANDATORY for the appliance to be installed on a flat surface or with a slight slope toward the condensate drain

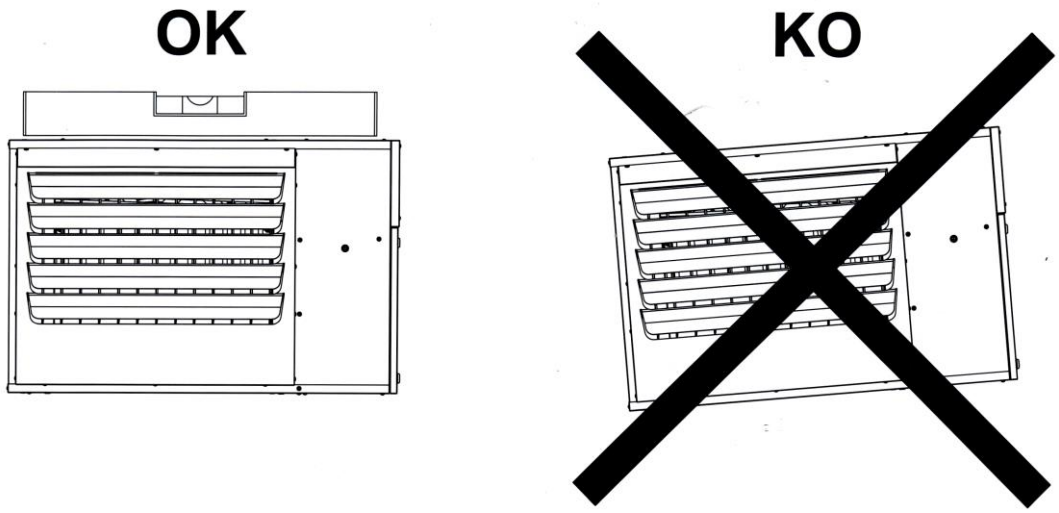

To properly install the machine, bear in mind that the hot air heaters should:

- have minimum safety distances around the appliance, so not to create obstacles for a correct air flow and allow normal cleaning, control and maintenance operations;
- keep safety distance from any flammable material;
- allow easy connection for the combustion products discharge;
- allow easy connection for any comburent air suction duct;
- allow easy connection to the gas distribution network;
- allow easy connection for the condensate exhaust;
- be close to an electric socket;
- allow for easy and safe performance of all maintenance operations and inspections;
- feature air vents provided for by the standards in force;

It is also necessary to make sure that:

- the flow and the pressure of the combustion gas are compatible with the appliance set-up and with the limits reported in the "TECHNICAL SPECIFICATIONS" paragraph

It is forbidden to install it:

- in places where there are aggressive atmospheres;
- in narrow places where the noise created by the heater could be amplified by reverb or resonance;
- in corners where there is a deposit of dust, leaves and anything that may reduce the efficiency of the unit by blocking the air passage.
- in pressurized places;
- in depressurized places;
- outdoors, if not provided with a protection against bad weather conditions.

Appliances equipped with axial type fan are not suitable for connection to ducts. For special requirements, consult the manufacturer, or select the version with centrifugal fan.

Example of installation in small and average premises:

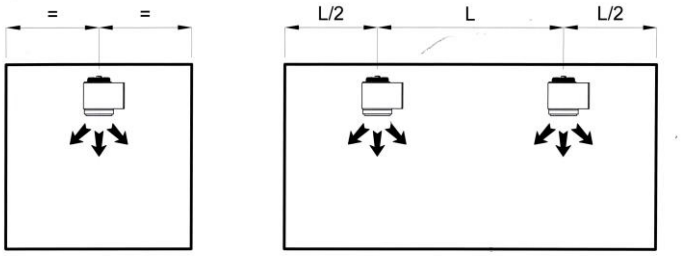

Example of installation in large premises/areas:

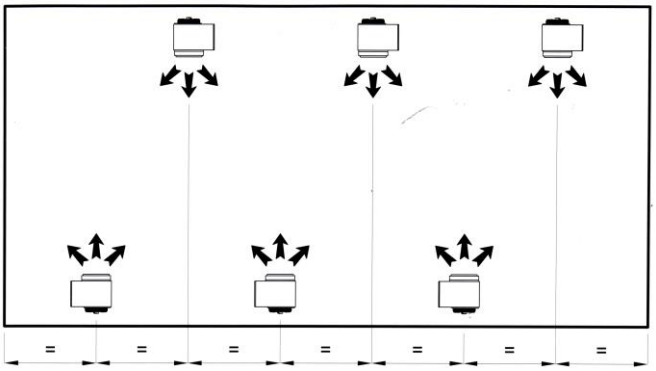

SAFETY AREA

The appliance must be easily reachable in safe conditions without the need of special equipment. Around the machine, minimum distances shall be complied with so that the control and/or maintenance operations can be performed and that no obstacles block the air flow.

⚠ **CAUTION!!!**

Any restrictions deriving from specific Laws and regulations must also be observed (for example regarding fires). Refer to the designer of the system.

Installation height and minimum distances from walls and ceiling:

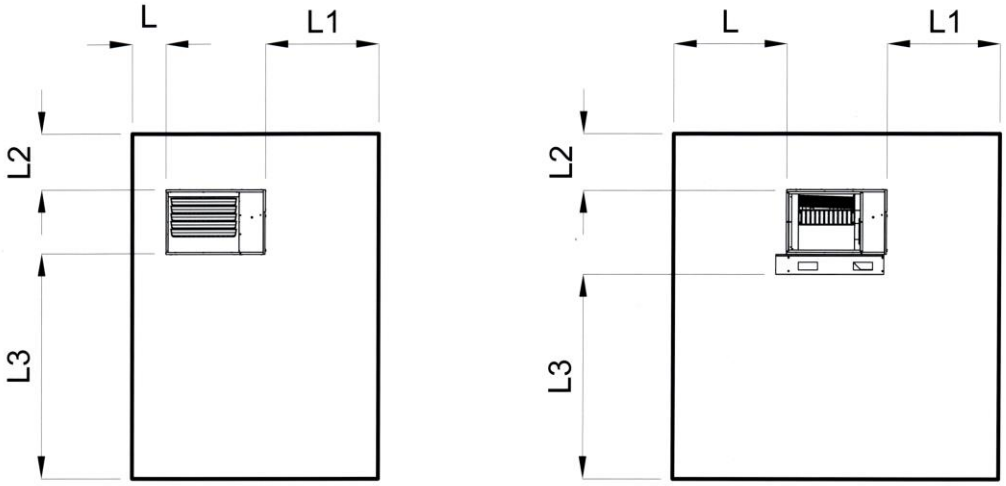

TYPE	unit	L	L1	L2	L3
0-1-2-3-4-5-6	mm	300	1,000	500	2,500
7-8-9-10-11-12	mm	1,000	1,000	500	2,500

FIXED GUARDS

In order to avoid the accidental contact with the movable parts of the machine, check if the following fixed protections have been properly installed:

- Grid – fan/s grid.
- Access hatch to burner compartment and control panel.

FUEL CONNECTION

The connection of the hot air heater to the gas supply, both methane G20 and G25 and liquid gas, must be performed by a qualified person, in accordance with the installation regulations. The hot air heater is delivered tested and pre-set for operation with methane gas H (G20) and it comes with a kit for conversion to methane gas (G25 where envisaged) and propane gas (G31).

Before connecting the unit make sure that:

- the type of gas is the one the unit is designed for;
- the pipes have been thoroughly cleaned and vented;
- the size of the distribution network is correct, so as to ensure the proper flow and pressure, in accordance with the section "TECHNICAL SPECIFICATIONS";
- the gas supply pipe is of a size equal to or greater than the connection pipe of the unit.

⚠ **CAUTION!!!**

Once the installation has been completed, check that the connections are sealed, in accordance with the installation regulations.

Diagram of the connection to gas supply mains:

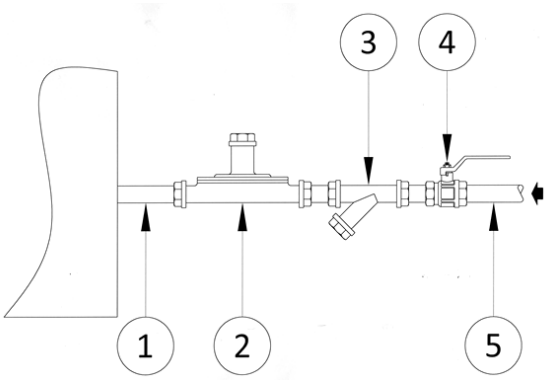

1. Male threaded **connection** of the device.
2. **Pressure stabilizer/reducer*** (necessary to assure the proper pressure of fuel gas supply pressure). This component is not essential in the case of methane gas G20 distribution networks with a stable nominal pressure.
3. **Filter*** (necessary to prevent impurities, which may be present in the gas line, from reaching inside the equipment as well as to enable easy inspection and maintenance).
4. **Manual gate*** (necessary to isolate the equipment during all maintenance activities or long stops).
5. **Duct** gas line*

(*) Not included when the unit is to be installed by the Customer.

As far as gas burners are concerned, we suggest placing a leak detector near them, which will operate an electro valve that will stop the gas supply in case of any accidental leak.
The gas supply line should be created by a skilled and qualified person, in compliance with all the relevant Laws, Regulations and Rules. Refer to the designer of the system.

As to propane gas G31 supply, it is recommended to install a first pressure reducer near the liquid gas tank to lower pressure to 1.5 bar, and a second reducer near the hot air heater to bring pressure from 1.5 bar to 40 mbar, **as required by the regulation in force.** A third reducer, installed in proximity of the equipment, will assure the proper supply pressure.

For high fuel flows contact the supplier of the tank to see if it is necessary to mount a vaporizer.

To prevent problems that may occur while emptying the tank (soot or failure to start), it is advisable to mount a pressure switch.

GAS CATEGORIES AND PRESSURE

Depending on the country of destination, gases available and their distribution pressure, the standard EN 437:2018 establishes the **categories** apply.

Summary table category and gas supply pressure:

COUNTRY	CATEGORY		GAS SUPPLY PRESSURE [mbar]				
	Simple	Double	G20	G25	G27	G30	G31
AT	-	II_{2H3P}	20	-	-	-	50
BE	I_{2E+}	I_{3P}	20 ↔ 25		-	-	37
BG	-	-	-	-	-	-	-
CH	-	II_{2H3P}	20	-	-	-	37
CY	-	-	-	-	-	-	-
CZ	-	II_{2H3P}	20	-	-	-	37
DE	I_{2ELL}	I_{3P}	20		-	-	50
DK	I_{2H}	-	20	-	-	-	-
EE	I_{2H}	-	20	-	-	-	-
ES	I_{2H}	I_{3P}	20	-	-	-	37
FI	I_{2H}	-	20	-	-	-	-
FR	-	II_{2Esi3P}	20	25	-	-	37
GB	-	II_{2H3P}	20	-	-	-	37
GR	-	II_{2H3P}	20	-	-	-	37
HR	-	II_{2H3P}	20	-	-	-	37
HU					-	-	
IE	I_{2H}	I_{3P}	20	-	-	-	37
IS					-	-	
IT	-	II_{2H3P}	20	-	-	-	37
LT	-	II_{2H3P}	20	-	-	-	37
LU			20				
LV	I_{2H}	-	20				
MK							
MT							
NL	-	II_{2HK3P}	-	20	-	-	37
NO	I_{2H}	-	20	-	-	-	-
PL	-	II_{2E3P}	20	20	-	-	37
PT	-	II_{2H3P}	20	-	-	-	37
RO	-	II_{2H3P}	20	-	-	-	30
SE	I_{2H}	-	20	-	-	-	-
SI	-	II_{2H3P}	20	-	-	-	37
SK	-	II_{2H3P}	20	-	-	-	37
TR	I_{2H}	-	20	-	-	-	-

- When is applicable a double category, the appliance can be converted from one gas to another about installing.
- When is applicable a simple category, meaning that the gas must be specified when ordering. The predisposition must be done in the factory.
- In some countries the standard 437:2018 not by any reference. If necessary consult factory for information and/or updates.

CONDENSATE DRAIN SYPHON

To avoid combustion products leaks from the condensate exhaust pipe and the return of fumes from the sewage system, the hot air heater is provided with a syphon with an internal float.

⚠ **CAUTION!!!**

The condensate disposal system must be made in compliance with the European, National and Local Reference Standards, verifying the need for a neutralization treatment if necessary.

⚠ **CAUTION!!!**

While starting-up for the first time, fill the container of the condensate drain syphon with water.

⚠ **CAUTION!!!**

An improperly performed drain compromises the correct operation of the appliance. Take into account the following points:

- The condensate disposal system, including the syphon, must be suitably **protected against freezing danger of the condensate inside the circuit**. It is recommended to implement the condensate collection system inside the heated premises.
- The total weight of the condensate drain system must not weigh on the equipment, and must be suitably and separately mounted.
- The condensate discharge system must be inclined suitably. It is forbidden to install pipes that are levelled and/or not inclined;
- All the condensate drain pipes should be connected independently, avoiding them to be combined in one duct;
- The configuration of the condensate discharge system must allow for the easy removal of the various inspection panels.
- The condensate discharge system must be easily removable, for any inspection and/or maintenance operations.
- For the size of the condensate discharge system, as a reference, consider what is indicated in Standard UNI EN 1196, section 6.6.1:
    - for natural gas 2 l/h of water per m3/h of natural gas.
    - for propane gas 3 l/h of water per m3/h of propane gas.
    - for butane gas 4 l/h of water per m3/h of butane gas.

For the connection of the syphon to the condensate disposal system, use a PVC or silicone pipe. It is recommended to perform the piping, constituting the condensate disposal system, with ducts, featuring an internal diameter, not less than 20 mm.

Under normal operation conditions, the condensate level in the syphon does not reach the level of the self-threading screw, placed in the appropriate catch basin and the hot air heater works regularly.

In case of accidental obstruction of the discharge system, the condensate level increases until reaching the self-threading screw placed in the appropriate catch basin. In this condition, the ionising electrode is earthed and the burner immediately switches off. The manual reset occurs only upon recovery of the correct operation conditions.

Normal operation condition:

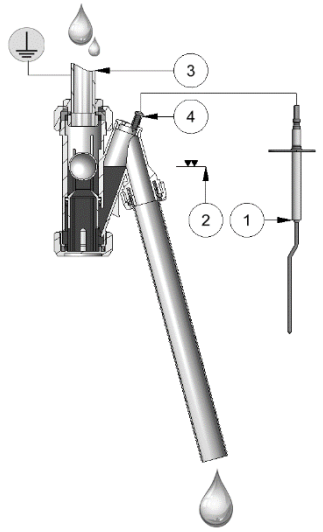

Operation condition with accidental obstruction of the condensate discharge system:

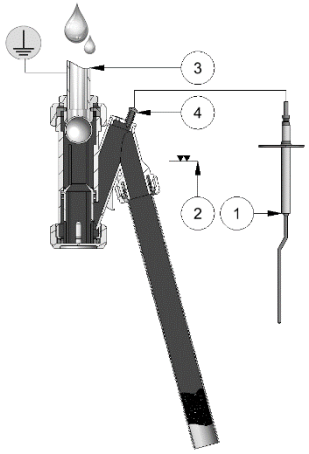

LEGEND:

1. Ionising electrode
2. Condensate level
3. Metal duct
4. Self-threading screw

AIR SUCTION FILTER

Accessory available upon request.

VERSION WITH CENTRIFUGAL FAN				
DESCRIPTION	**Unit**	**TYPE 7**	**TYPE 8**	**TYPE 9**
FILTER CELLS				
size	mm	500 x 500 x 98	500 x 500 x 98	500 x 500 x 98
quantity	Nr.	1	1	1
size	mm	-	-	400 x 500 x 98
quantity	Nr.	-	-	1
Filtration class		G3	G3	G3
head loss with clean cells	Pa	80	150	70

VERSION WITH CENTRIFUGAL FAN				
DESCRIPTION	**Unit**	**TYPE 10**	**TYPE 11**	**TYPE 12**
FILTER CELLS				
size	mm	500 x 500 x 98	287 x 592 x 98	287 x 592 x 98
quantity	Nr.	1	5	5
size	mm	400 x 500 x 98	-	
quantity	Nr.	1	-	1
Filtration class		G3	G3	G3
head loss with clean cells	Pa	100	70	115

ELECTRICAL CONNECTIONS

The electrical connections must be made by qualified personnel in compliance with the Regulations in force, using the terminal boards supplied. For any electrical work, refer to the electrical wiring diagrams included in this booklet.

⚠ **CAUTION!!!**

- Install upstream of the unit a differential magneto thermal circuit breaker suitably sized according to the regulations in force.
- Always connect the earthing system, taking care to leave the earth wire slightly longer that the other wires, so that, in case of accidental pulling, the latter is the last one to be removed.
- Get qualified personnel to check that the section of the cables and the electrical system are suitable for the maximum power absorbed by the unit indicated on the information plate.
- The unit must be connected to an efficient earthing system. The manufacturer shall not be held responsible for any damaged caused by failure to connect the appliance to the grounding system.
- The electrical cables must be positioned so as not to come into contact with hot and/or cold surfaces, or with sharp edges.
- In accordance with the Standards regarding the installation of electrical components, a device that ensures disconnection from the mains with an opening distance between contacts that guarantees complete disconnection in overvoltage conditions III (Standard EN 60335-1) must be included.
- It is forbidden to use water pipes or gas pipes to earth the unit.
- Use appropriate cable glands PG9 and PG13 for the power cables and control cables of the appliance.

The hot air heaters leave the factory with the electrical panel assembled and wired; they require only for the connection to the power mains and remote control panels.

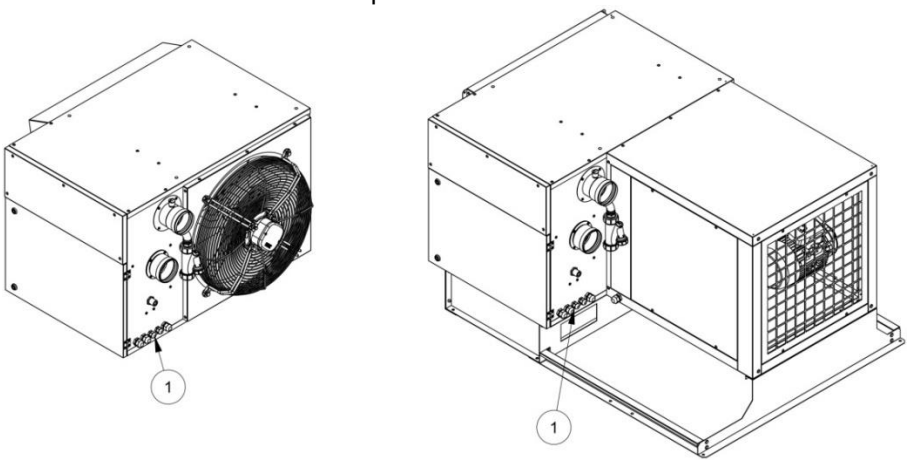

1) Cable inlet cable glands

⚠ **CAUTION!!!**

- The cables entering the appliance, through the blocks provided, must be locked in position.
- Respect the phase - neutral polarity
- The applicable National and European Standards relating to electric safety must be respected. Before starting the device, check the cables; incorrect wiring may damage the devices and compromise the safety of the system.

ELECTRICAL DIAGRAM

The wiring diagram is included in paper form and in an easy to read format in the electrical panel and is an integral part of this instruction manual. We recommend keeping it carefully together with the other documents. In case of loss, a copy can be requested to the Manufacturer, by indicating the serial number of the appliance.
In case of doubts, do not perform any operation on the machine. Please, contact the Manufacturer for further clarifications.
In accordance with the Standards regarding the installation of electrical components, a device that ensures disconnection from the mains with an opening distance between contacts that guarantees complete disconnection in overvoltage conditions III (Standard EN 60335-1) must be included.

Wiring diagram for single-phase power supply appliances 230V~50Hz 1N (0-1-2-3-4-5)

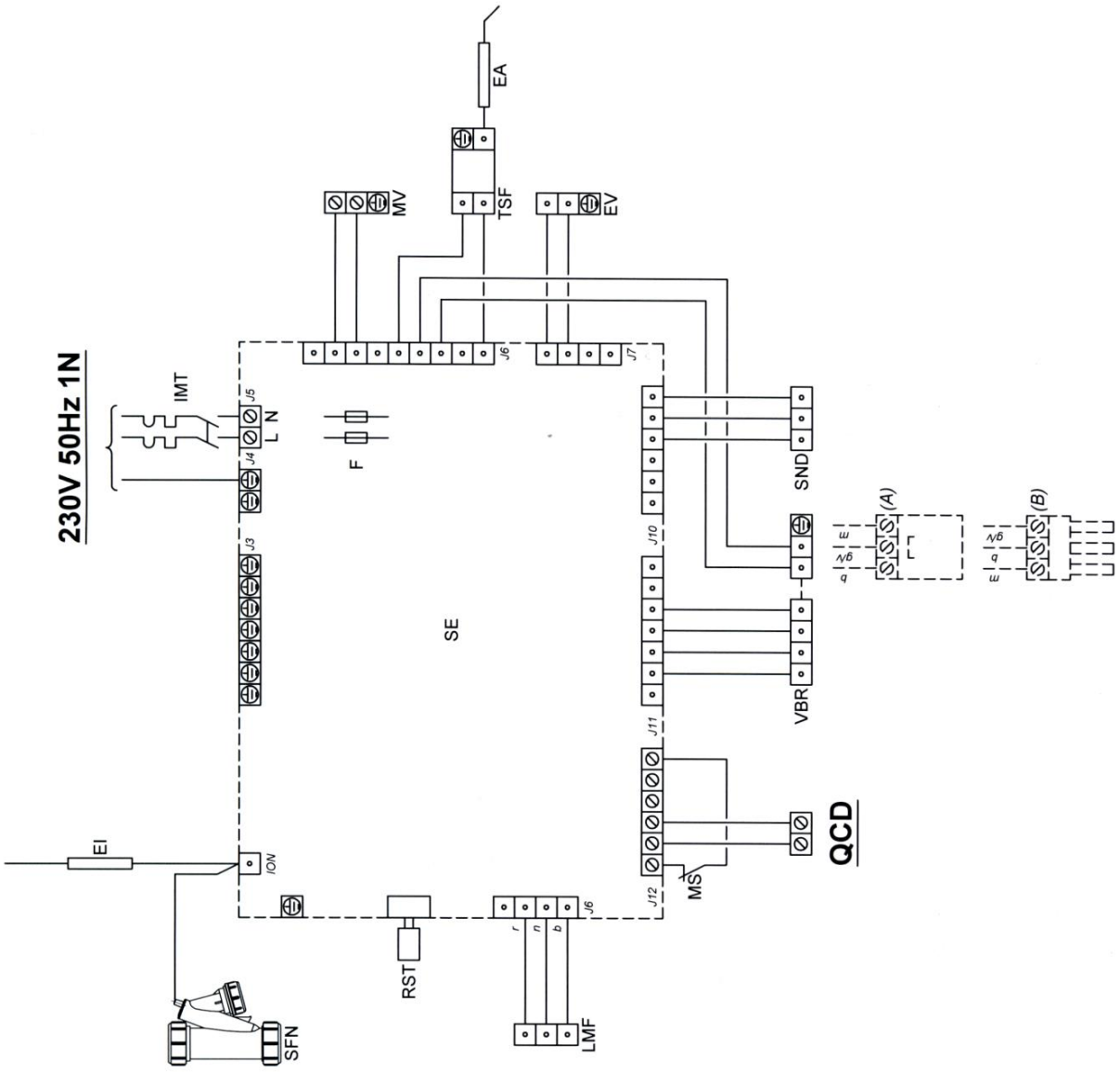

Components key:

RST	Reset button
F	Fuses
SFN	Condensate drain syphon
SE	Electronic board
MV	Fan/s motor/s
TSF	Start-up transformer
EI	Ionization electrode
EA	Ignition electrode
EV	Gas Solenoid valve
SND	Temperature probe

VBR	Pre-mixed burner fan
LMF	Multifunctional led
MS	Fire dampers micro-slide valve
IM	Magnet circuit breaker switch
CONVEYOR	Contactor
R1	Inlet relay
IMT*	Differential circuit breaker switch
QCD*	Remote control panel
*****	Not supplied

(A) *TYPES 1-7-2-8-3-9-4-10*
(B) *TYPES 5-11-6-12*
b *blue*
y/g *yellow/green*
b *brown*

Wiring diagram for three-phased power supply appliances 400V~50Hz 3N (TYPES 6-7-8-9-10-11-12)

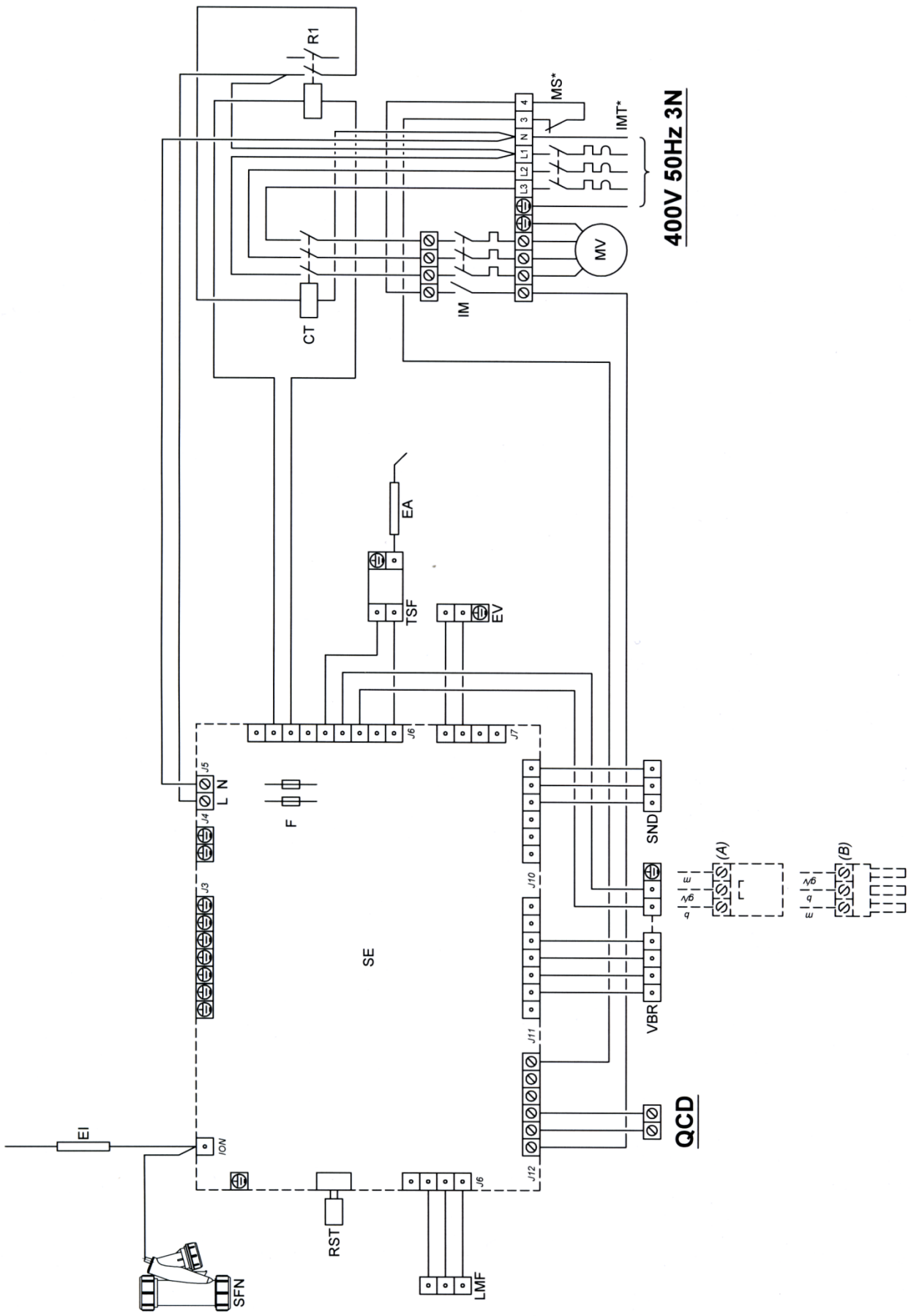

SOME ELECTRIC CONNECTION EXAMPLES

Communication between the remote control panel (acting as master) and the multifunction control boards (slave) of the hot air heaters occurs by means of non-polarized two-wire cable. In particular, each remote control panel is able to manage up to 10 appliances, connected to each other with a cable, featuring a maximum total length equal to 50 metres.

Example of electric connection of several cascaded appliances:

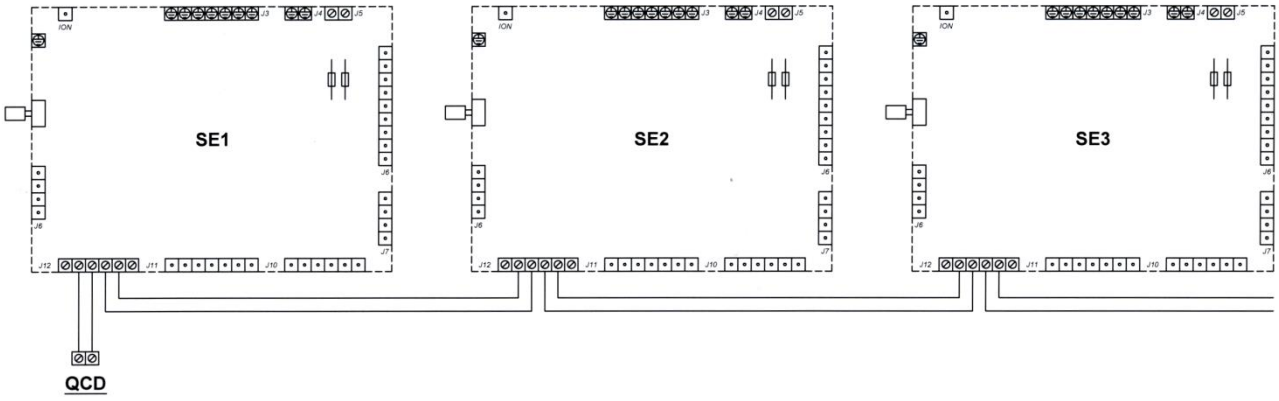

Components key:

QCD	Remote control panel
SE1	Electronic board no. 1

SE2	Electronic board no. 2
SE3	Electronic board no. 3

Diagram referring to several appliances installed in different environments with remote control equipped with built-in temperature probe installed in each environment:

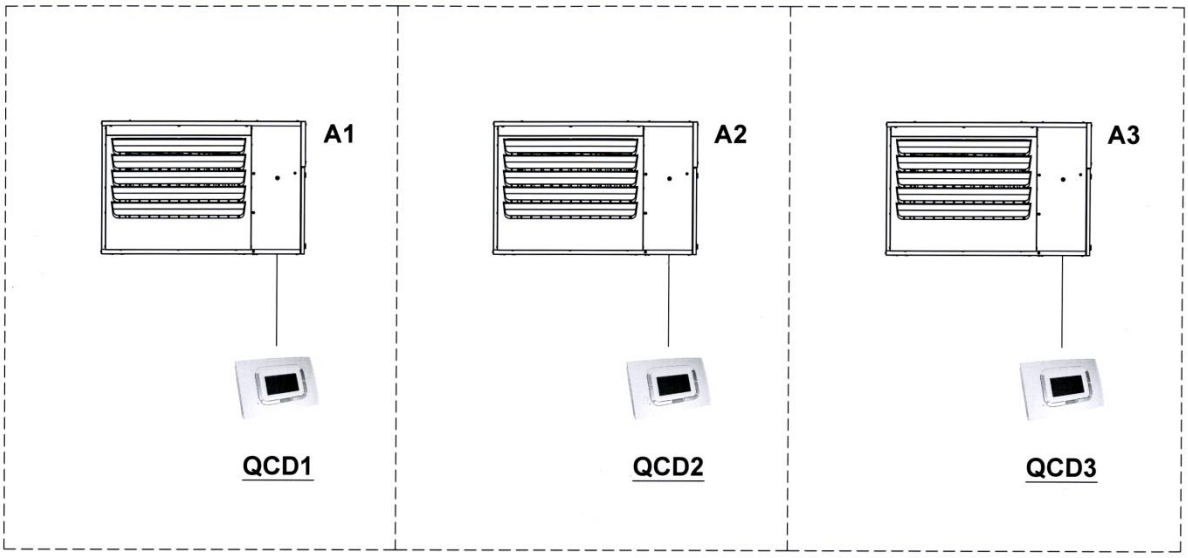

Components key:

QCD1÷3	Remote control panel no. 1÷3
A1÷3	Appliance n. 1÷3

In this case each appliance of each environment is controlled by its remote control panel.

Diagram referring to several appliances installed in different environments with remote control equipped with built-in temperature probe installed in separate environment.

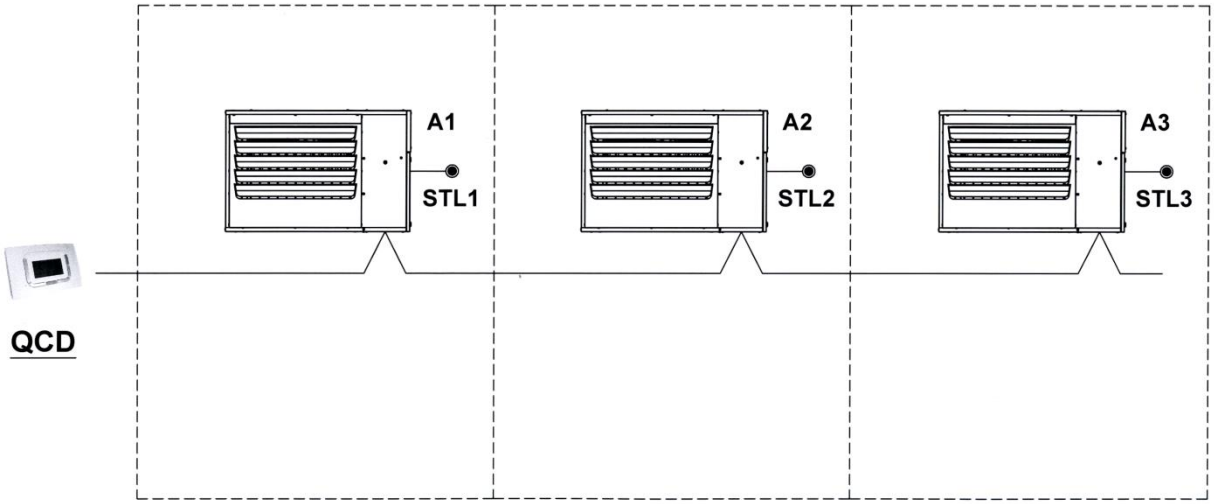

Components key:

QCD	Remote control panel
A1÷3	Appliance n. 1÷3

STL1÷3	Local temperature probe no.1÷3

In this case, the appliances A1, A2, A3 are controlled by the local temperature probe STL (option).

Diagram referring to several appliances installed in one environment with remote control equipped with built-in temperature probe installed in the same environment.

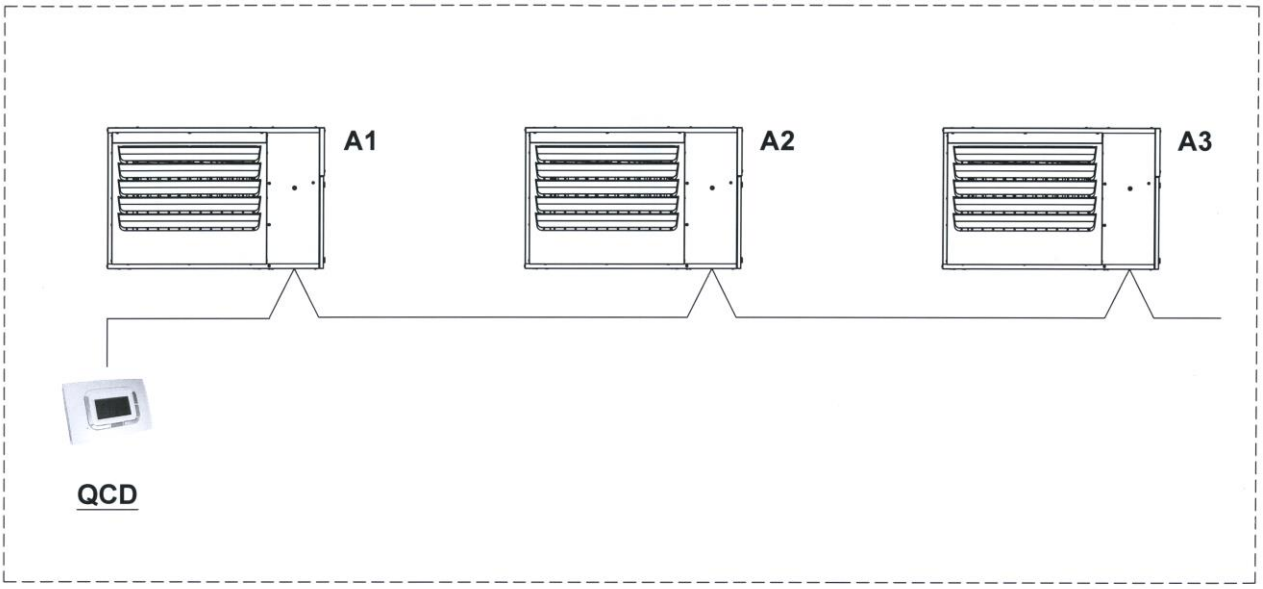

Components key:

QCD	Remote control panel
A1÷3	Appliance n. 1÷3

In this case, the appliances A1, A2, A3 are identically controlled by a single remote control panel.

Diagram referring to several appliances installed in one environment with remote control equipped with built-in temperature probe installed in the same environment.

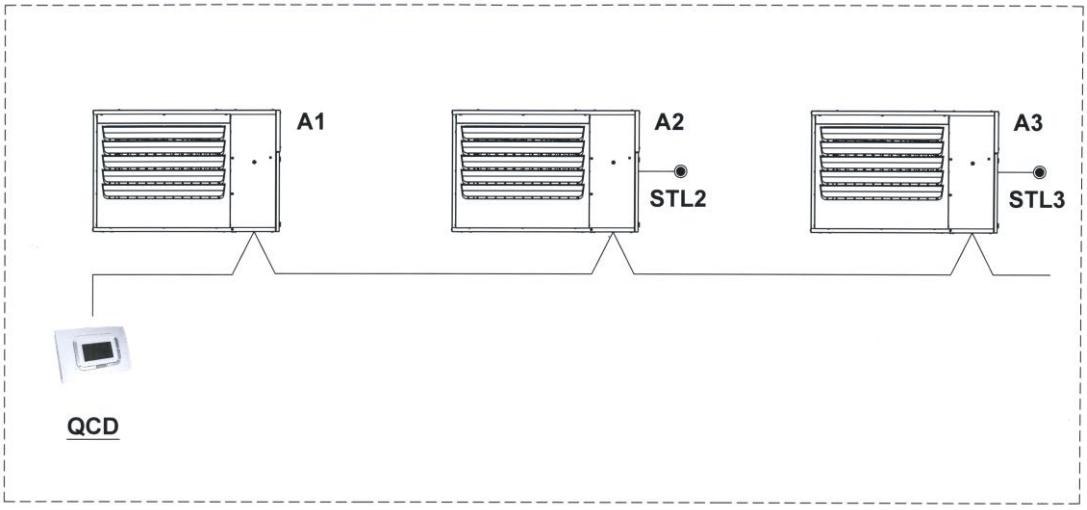

Components key:

QCD	Remote control panel
A1÷3	Appliance n. 1÷3

STL2÷3	Local temperature probe no. 2÷3

In this case, the appliance AT1 is controlled by the temperature probe built in the remote control panel, while the appliances A2, A3 are equipped with and controlled by the local temperature probe STL (option).

Diagram referring to several appliances installed in one environment with remote control equipped with built-in temperature probe installed in separated premise:

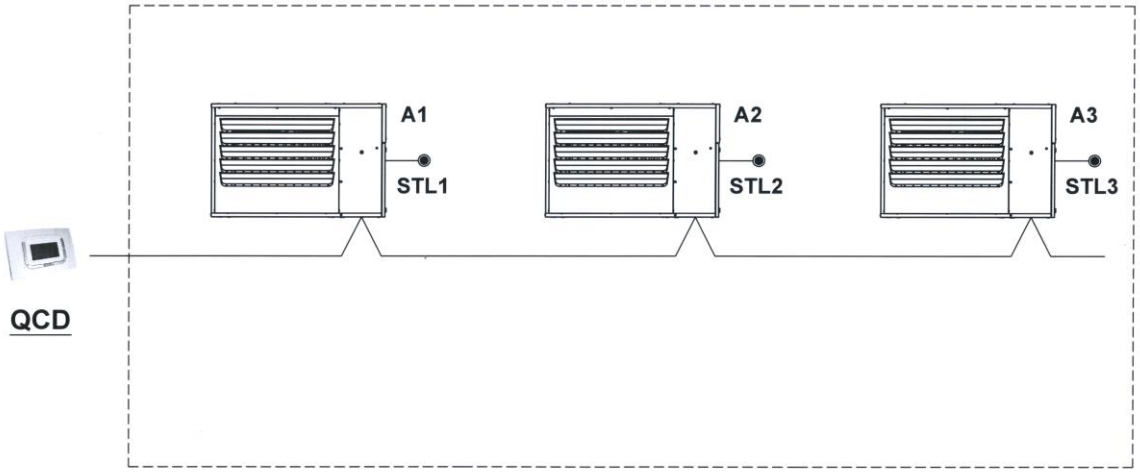

Components key:

QCD	Remote control panel
A1÷3	Appliance n. 1÷3

STL1÷3	Local temperature probe no. 1÷3

In this case, the appliances A1, A2, A3 are controlled by the local temperature probe STL (option).

OUTDOOR AIR PROBE

As an option, an outdoor air probe kit is available, to be used in case a thermal-regulating function may be required.

FUME EXHAUST AND COMBURENT AIR INTAKE

The legislation in force establish that such appliances can be installed according to one of the following five types of combustion products and of combustion air suction channelling indicated by the abbreviations: B_{23} - B_{23P} - C_{13} - C_{33} - C_{63}.

It is absolutely forbidden to use plastic material on the fumes exhaust duct.

GENERAL WARNINGS AND INFORMATION

- **All the components of the exhaust system should compulsorily be EEC certified.**
- The exhaust pipe and the flue connector should be made in compliance with the Regulations and Laws in force. They should be made up of metal and stiff ducts, capable of resisting to mechanical, thermal and chemical stress caused by the combustion.
- For the implementation of the exhaust pipe, metal material, resistant to the corrosion of the condensate of combustion products must be used.
- Joint seals should be made of materials resistant to the thermal and chemical stress caused by the combustion products, with condensate formation.
- In order to prevent the condensate from flowing back from the flue pipe to the hot air heater, a condensate drain should be placed in the lowest point.
- The weight of the pipe should not be wholly borne by the warm air heater.
- Non insulated exhaust pipes might be a source of dangers.
- Unsuitable or wrongly sized flues or fume pipes might amplify the burning noise and affect negatively the combustion parameters.
- If walls and/or covers have to be crossed, this operation should be perfectly carried out, preventing seepage or fire risks.
- In case of danger of dusty and/or contaminated comburent air suction with various substances, it is mandatory to install a suitable filter. This avoids the dust from getting trapped in the metal mesh of the burner tube.

Moreover, we suggest:

- **use ducts with smooth internal surface, resistant to combustion products thermal and chemical stress, with a diameter equivalent to or bigger than the joint of the equipment;**
- avoid narrow bents and section reductions;
- properly anchoring the smoke discharge pipe;
- having a proper end cover to prevent rainwater seepage into the machine and significant friction losses.

WARNING

The horizontal stack sections, making up the fume exhaust, must be installed slightly tilted towards the appliance so that the condensate created inside the fume pipes returns towards the appliance.
Vice versa, the combustion air suction pipe, when it exits horizontally the wall, must be slightly inclined toward the wall so that the rain does not enter the control compartment of the hot air heater.

Type B_{23} - B_{23P} installation diagram:
(The drawings represent the appliance with AXIAL fan, but the concept is applicable as well to the centrifugal fan version)

In this configuration the appliance must be connected to a single duct leading to the outside of the combustion products premise. The combustion air is instead directed inside the environment housing the appliance.

Wall outlet configuration:

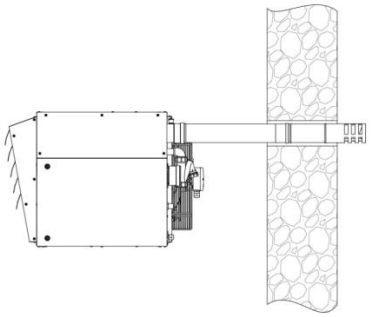

Roof outlet configuration:

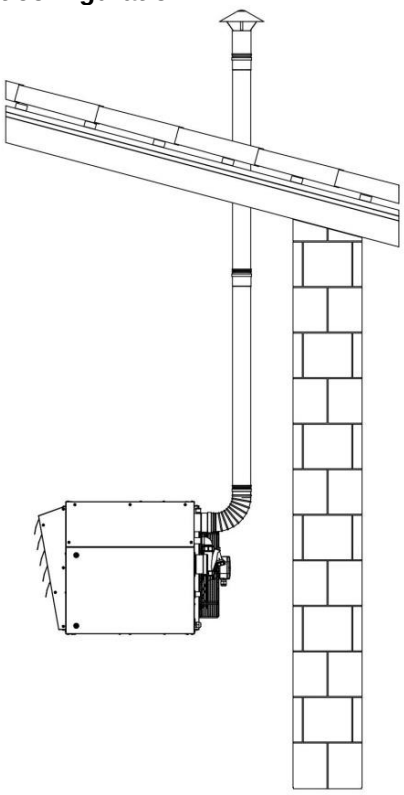

Type C_{13} installation diagram:
(The drawings represent the appliance with AXIAL fan, but the concept is applicable as well to the centrifugal fan version)

In this configuration the appliance has the ducts, one for the combustion products exhaust and the other for combustion air suction, both communicating with the environment outside the premise that houses it. The exhaust has to be wall-mounted and can be made with two distinct ducts or with two coaxial ducts.

Separated wall-mounted exhaust configuration:

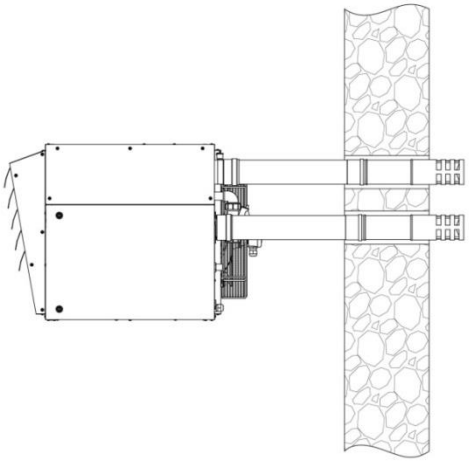

Configuration wall-mounted exhaust configuration:

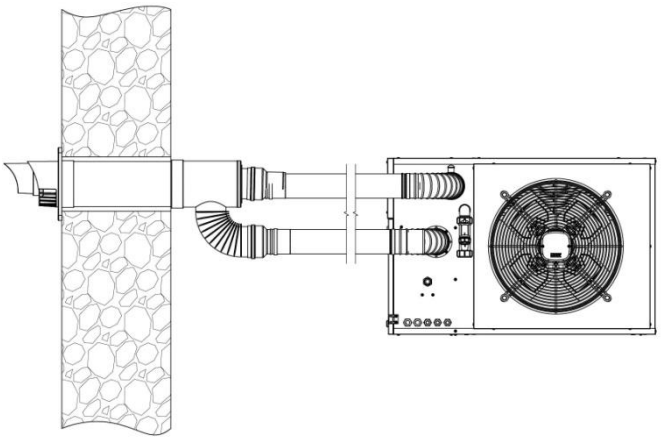

Type C_{33} installation diagram:
(The drawings represent the appliance with AXIAL fan, but the concept is applicable as well to the centrifugal fan version)

In this configuration the appliance must be connected to two ducts, one for combustion products exhaust and the other for combustion air suction, with coaxial terminal communicating from the roof with the environment outside the premise housing it.

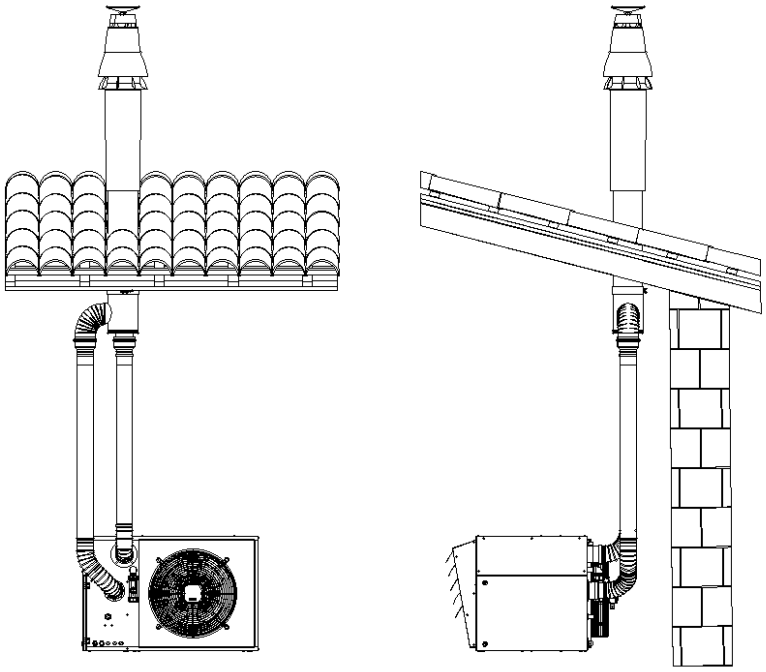

Type C_{63} installation diagram:
(The drawings represent the appliance with AXIAL fan, but the concept is applicable as well to the centrifugal fan version)

In this configuration the device requires connection to two distinct ducts communicating with the outside. The combustion products dust releases them from the roof, while the combustion air suction duct passes the wall.

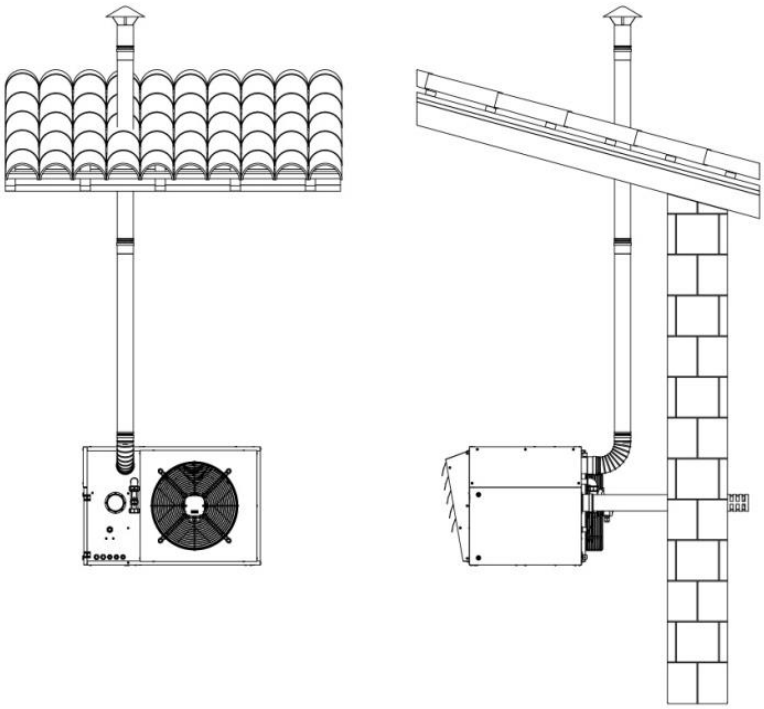

PREPARING FOR FIRST START-UP

The initial start-up of the unit must be carried out by the authorized Technical Assistance Service who will then validate the Warranty Certificate. Before starting up and performing the functional testing of the heater, check that:

- all safety conditions have been followed
- the PVC film has been removed from any pre-painted panels;
- the vertical and horizontal wings have been opened;
- the device has been properly placed;
- there is enough space around the unit;
- all the connections to the fuel have been made correctly;
- the flue exhaust pipes and combustion air intake have been installed correctly;
- all the valves of the various circuits are open;
- all the electrical connections have been made correctly;
- there is compatibility between the fuel and the set up of the machine.

⚠ **CAUTION!!!**

During the initial start-up, there may be the formation of odours and fumes due to the evaporation of the liquid added to protect the heat exchanger during storage; this is normal and it will disappear after a short period. It is recommended to suitably ventilate the room.

The hot air supply spout is provided with individually adjustable precut horizontal wings in the supply panel. Adjustable vertical wings are fitted as well on the inside of the appliance to allow, in case of necessity, pointing the flow other than in the direction adjusted at the factory.
Adjust manually each horizontal and vertical fin direction so to adapt distribution of the hot air in the vertical direction on the basis of the environment to be treated.

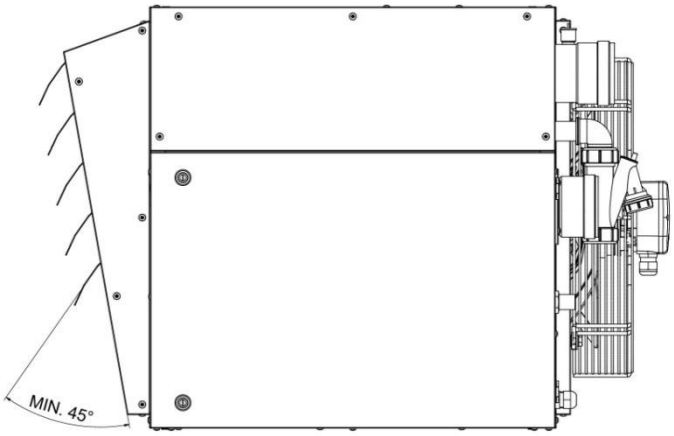

A proper air capacity is a basic condition to ideally heat the room, moreover it is necessary to properly cool the heat exchanger.
It is therefore essential for the air flow generated by the fan to meet no resistance; therefore, no obstacles must be present in the air supply and return flow path.

⚠ **CAUTION!!!**

The horizontal flow directing wings must be open and should not be inclined over 45° compared to the air flow direction (see figure above).

FIRST START-UP

Upon first start up of the hot air heater act on the remote control panel, both to switch on the appliance and to check its correct operation in "ventilation only" and "heating" mode.
The instructions for the use of the remote control panel controls are described in the section "REMOTE CONTROL PANEL"

CAUTION!!!

For appliances with three-phase electrical power, check the fans direction of rotation as indicated by the arrow on the sticker placed in proximity of the same

CAUTION!!!

Before performing any operation on the electric board, it is necessary to disconnect the general power supply located upstream of the appliance

CAUTION!!!

While starting-up for the first time, fill the container of the condensate drain syphon with water.

CAUTION!!!

Whenever the parameters/settings are modified using the remote control panel, wait ten seconds before getting the response of the appliance.

FORBIDDEN!!!

IT IS FORBIDDEN to shut down the hot air heater by disconnecting the main power supply, as the thermal energy accumulated in the exchanger may cause the LIMIT safety thermostat to trip and consequently require for manual unlocking. Moreover, such operation, if repeated, causes dangerous overheating of the heat exchanger.

CENTRIFUGAL FAN ADJUSTING

The pulley installed on the centrifugal fan motor has a variable primitive diameter.
The machines ordinarily come with a median transmission ratio, so the nominal value can be obtained in most cases of installations.
For other uses requiring diffusion of channelled air, filters, etc. - i.e. for all solutions requiring changes in the aeraulic resistance - the air flow should be adjusted to the nominal value, if needed.
This check can be performed precisely with specific tools or approximately (with a good approximation) by checking (when the burner is calibrated on the nominal thermal capacity) the thermal gradient between the air outlet temperature and the air inlet temperature and comparing it with the specifications of the "TECHNICAL DATA" paragraph.
In any case, you should check that the fan rotation direction matches the direction indicated by the arrow on the worm-conveyor. If there is a three-phase electric motor, to change the direction of rotation simply invert a phase of the supply line without tampering with the wiring of the electrical panel. It is also necessary to **make sure that the motor absorption does not exceed the value indicated on the plate,** by adjusting, if necessary, the fan rpm to obtain this result.

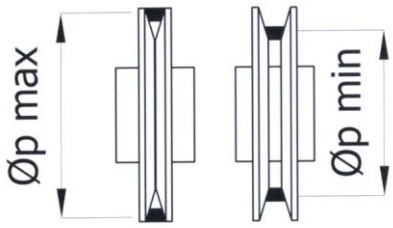

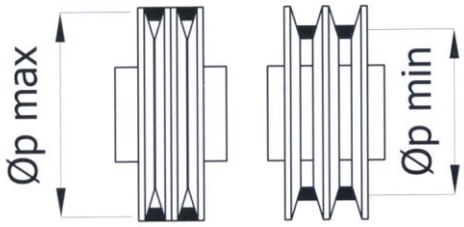

⚠ **CAUTION!!!**

By increasing the primitive diameter of the drive pulley, the number of rotations of the fan and the electric absorption of the motor increase. By decreasing the primitive diameter of the drive pulley, the number of rotations of the fan and the electric absorption of the motor decrease.

Never pull the belts too tightly, as the fan shaft may break. When you press the two sides of the belt with your hands it must be able to bend about 20-30 mm.

New belts, after a certain period of operation, tend to get longer. It is therefore recommended to check the correct tensioning of the belts after a certain time.

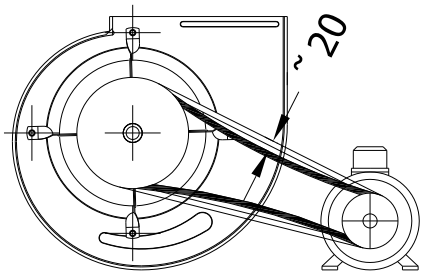

Modifying the fan rpm:

To change the fan rpm, perform the following operations:

- Loosen the stretching of the belts by loosening the screw **2**;
- Remove the belt/s **1;**
- Using a hexagonal bar spanner **5**, slacken the grub screws **4** of the sheave **3** mobile part.
- Rotate the sheave of the mobile part until the desired original diameter is reached.
- Tightly lock the grains **4** in correspondence with the hub cavity;
- Install the belt **1** and stretch it back.

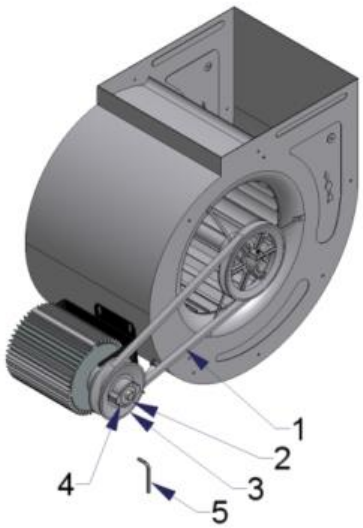

Checking the current absorption:
To check the electrical absorption of the fan motor, proceed as follows:

- Insert the clamp meter on a phase of the main supply line;
- Set the machine for operation in summer mode, so as to exclude all other devices (burner and auxiliaries);
- Read the electrical absorption value on the clamp meter and compare it with the data on the plate of the motor.

Fan motor maximum power and current

DESCRIPTION	Unit	TYPE 7	TYPE 8	TYPE 9
Fan motor		Version with static pressure 200 Pa		
fan motor power	kW	0.75	1.1	1.1
max current	A	1.79	2.5	2.5
Fan motor		Version with static pressure 450 Pa		
fan motor power	kW	1.1	1.5	1.5
max current	A	2.5	3.2	3.2

DESCRIPTION	Unit	TYPE 10	TYPE 11	TYPE 12
Fan motor		Version with static pressure 200 Pa		
fan motor power	kW	1.5	1.5	3.0
max current	A	3.2	3.2	6.2
Fan motor		Version with static pressure 450 Pa		
fan motor power	kW	2.2	2.2	4.0
max current	A	4.7	4.7	8.1

INSTRUCTIONS FOR THE USER

The hot air heater is a tool that provides to the heating of the air environment using the thermal energy produced by combustion.

The thermal exchange occurs through the contact of air flow generated by one or more AXIAL fans with the heat exchanger surfaces, therefore with no intermediate heating fluid.
The flow direction wings, easily adjustable, allow to point the hot air according to the specific requirements of the system.

This system allows to remarkably reduce system costs and a safe operating economy; therefore, it is particularly fit for those cases where an occasional and discontinuous use is expected.
Implementing the comburent air intake externally, the combustion circuit becomes sealed and this allows to use these appliances even for the heating of environments, where required.

The appliance is designed also to ventilate the environments during summer.

⚠ **CAUTION!!!**

The specific appliance has been designed to operate in presence of CONDENSATE of the combustion products. The temperature of the fumes, lowering under the dew point, allows to recover the latent energy contained in the water vapour normally generated in a combustion process.

For the maximum environmental comfort, a premixed burner with a modulating thermal capacity, allows to adapt the operation of the appliance to the instant needs of the users.

REMOTE CONTROL PANEL

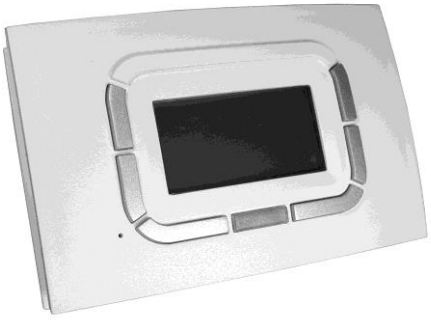

The appliance is characterised by operation with variable thermal capacity and continuous modulation, controlled automatically by a remote control panel.
The remote control panel integrates the functions of ambient thermal regulation and remote control of the heating system in a single interface, specially designed to make all functions available to the user in a clear and intuitive way.
At the same time, the control of the heating system is complete and thorough, allowing to manage the operating parameters of several heaters, with the relative control boards connected in cascade, and the release, if present.
It is possible to choose different modes of temperature control, also using an external probe (connected to one of the heaters) for climatic compensation.
Weekly programming is particularly versatile since there are 4 levels of temperature that can be set and no limits on the number of daily time bands, consisting of individual intervals equal to a quarter of an hour and displayed on the dedicated graph of the daily program.

Communication between the remote control panel (acting as *master*) and the control boards (*slave*) of the hot air heaters occurs by means of non-polarized two-wire cable.
In particular, between the remote control panel and the control boards of the heaters, the data is exchanged with an OpenTherm™ v3.0 Smart Power Mode – Medium Power compatible communication protocol.

Main features:

- Graphic LCD 128x64
- backlight timed to 20 s
- LED for diagnostics/alarms
- 7 variable function keys
- weekly programming
- 4 temperature levels (T0, T1, T2, T3)
- resolution of ambient temperature settings: 0.5°C
- resolution of measured ambient temperature: 0.1°C
- minimum programming range: 15 minutes
- Safety Extra Low Voltage (SELV) insulation type
- simple connection (not polarized) to the control board with two-wire cable
- protocol compatible with OpenTherm™ v3.0 Smart Power Mode - Medium Power

Technical data:

- Operating temperature: 0°C +50°C
- Humidity: 95% maximum at 40°C
- Power supply: low voltage (3V), obtained from communication with the control board
- Protection Degree: IP30
- Dimensions: 140x90x32 mm
- Compliant: with the Directive on electromagnetic compatibility (2004/108/EC) and to the Low Voltage Directive LVD (2006/95/EC)

Remote control keypad

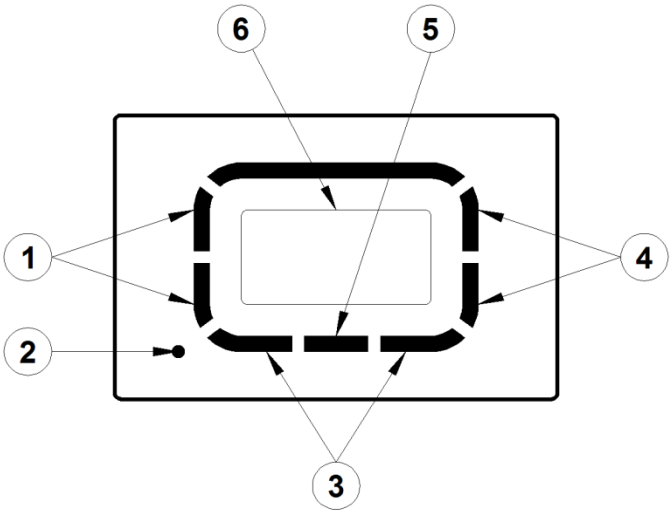

1. Function keys normally used to change function or select the parameters
2. Reset button access hole
3. Function keys (the active control is indicated each time on the graphic display)
4. Keys normally used to increase and decrease the temperature and parameters
5. Transparent multi-function key with LED
6. LCD graphic display

Instructions for use:

To display the parameters and interact with the heating system, the remote control panel offers the user a dot matrix LCD graphic display and a series of silicone rubber keys, as well as a transparent key that also acts as a window for a warning LED.
The versatility of the keys makes them adapt and activate according to the menu selected: their use is simplified by the words, icons and other graphic elements that appear on the display in correspondence with the keys themselves.
In particular, the vertical keys to the left of the display are typically used to navigate through the set-up menu or to select the parameters with which to interact.
The vertical buttons to the right of the display, at the same time, allow to vary parameters and temperatures with the classic increase/decrease (+/-) function.
To make changing the set values easier, pressing and holding these keys "accelerates" the increase or decrease.
The horizontal buttons at the bottom are used, in most cases, to confirm or cancel the settings or to enter and exit the various sub menus.
Note that the transparent plastic key, which has specific functions such as release, also acts as a window for the underlying warning LED:

- red light (flashing): one or more heaters stopped;
- green light: on (even for several seconds) while the remote control panel is resuming operation after a power failure.

The functions most frequently used by the user are easily available in the main or first level menu, where it is possible to rapidly browse through the various pages to set, for example, the room temperature control or the maximum relative power (%) provided by the warm air heaters.

When switching on the first time or after resetting the remote control panel, the language selection menu is displayed, as shown in the following figure.
The keys on the left are to select while the OK key confirms the selection.
This selection can be changed later, if required, via the "set-up menu".

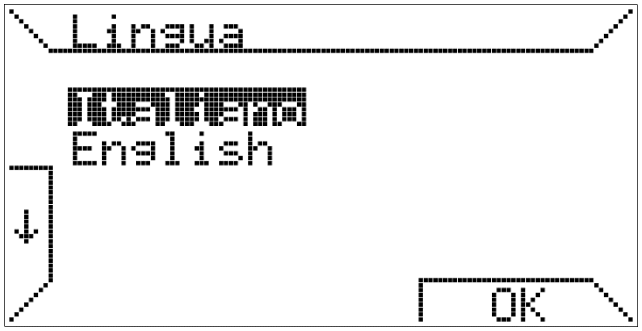

Then the current time can be entered.

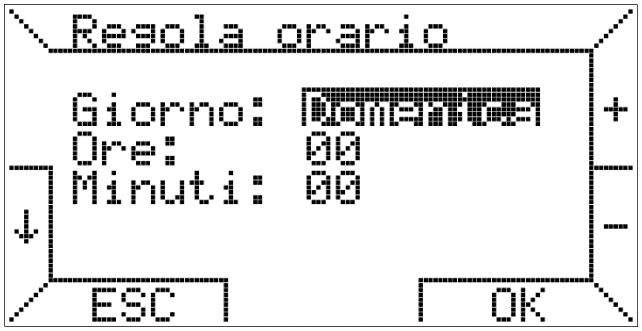

In this case too, the keys on the left allow you to select the various items of the menu, while the keys on the right are used to change the value; the OK key saves the settings while the ESC key allows you to continue without changing the time.
On pressing ESC when reconnecting to the remote control panel (for example, because of a power failure) the user will be prompted to select the language and set the current time again.

⚠ **CAUTION!!!**

After having set the language and the current time and date, wait for about 1 min' for the ambient temperature display to appear.

BASIC FUNCTIONS

FIRST LEVEL MENU

When the remote control panel is connected to a hot air heater equipped with a special electronic control board, the following screen will be displayed.

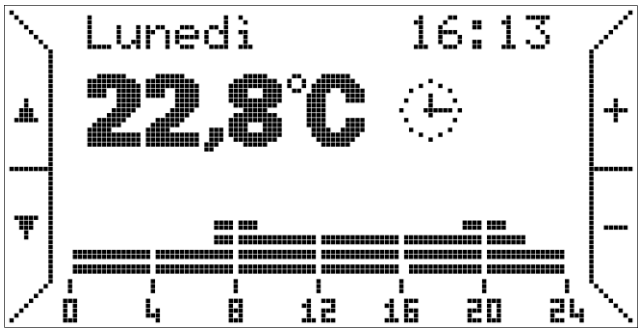

Note that, if the board is not compatible, an error message will be displayed.
At the top are the day of the week and the current time; these will be flashing if they need to be updated (for example, if you have pressed ESC on the initial time setting screen, in reference to the previous paragraph).
Below, clearly visible, is the ambient temperature measured (every 10 seconds); next to it is an icon indicating the temperature control function that is currently active: in this case the face of a clock indicates, as can be imagined, "automatic" mode.

Correspondence between icons and operating modes:

	Automatic	Temperature control according to the weekly program set by the user. Current day program displayed as a graph.
	Manual	Room temperature control according to a temperature selected by the user (thermostat function).
	Summer	Room heating function disabled. Summer ventilation can be activated manually
	Off	Temperature control and ventilation functions off

In automatic mode, the remote control panel performs the temperature control program set for the current day, the graph of which is displayed at the bottom.
This graph is divided into time intervals of 15 minutes, corresponding to one pixel in horizontal, and into the four programmable temperature levels.
Next to the temperature control icon there is, in certain conditions, another icon relating to the heating system which indicates that the burner is on (flame symbol of different sizes depending on the power level) or that there is an interruption or anomaly (corresponding to the symbols , respectively) or even a communication error (icon).
In the example screen there are no icons, therefore the system is in stand-by (no request for heating) and there are no faults.
Under the indication of the ambient temperature there may also be a line of text that provides information to the user in particular cases, such as the presence of an interruption or error.

In this case, the keys on the right, marked by + and -, allow to change the temperatures for the automatic program (T0, T1, T2, T3), while in "manual" mode (icon) the corresponding temperature changes.
By pressing the keys on the left, marked by arrows, it is possible to scroll through the pages of the first level menu.
When the key at the bottom is pressed, for example, the following option appears.

Press the +/- keys to change the temperature and the OK key to activate manual mode.

Press the key with the down arrow again to activate "summer" mode, thus disabling ambient temperature control.

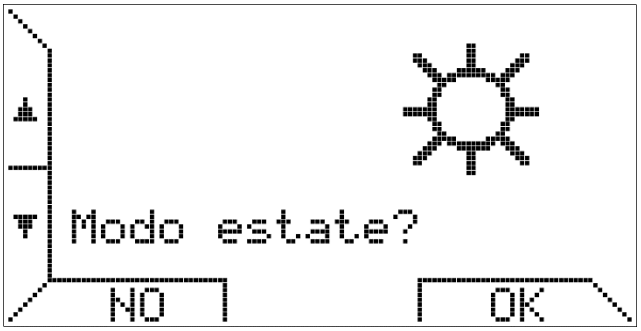

If you select "summer" mode, it is also possible to activate summer ventilation by means of the dedicated key [Vent.]. Once ventilation has been activated, the indication of the key becomes [V.Off], as it is possible to stop the ventilation by pressing the same key.

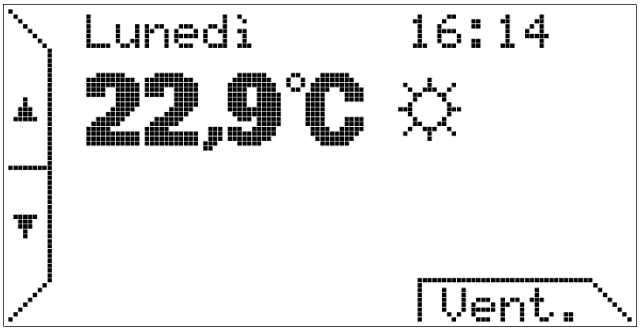

Note that the heating system is considered as a whole, to simplify management on part of the user; therefore, the most used functions are not explicitly separated from those strictly relating to the heaters (for example power limit, unlocking) and those relating to ambient temperature control.

Press the ▼ key again to move on to another option:

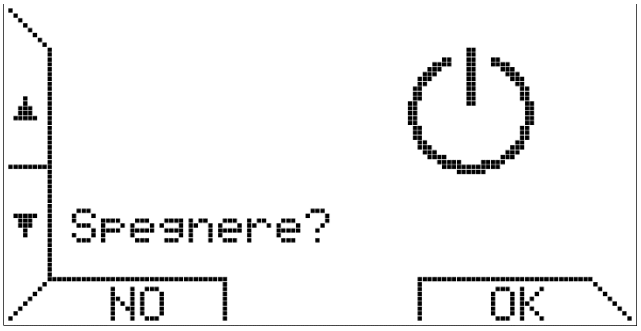

which allows you to turn the system off or, actually, to put it in stand-by, since the control devices remain powered.

Note that all the screens described so far and the ones described below can also be accessed by pressing the key ▲; in this case, since the first level menu is "circular", the selection order of the screens will be reversed.

Press the ▼ key again to access the sub menu described as “SETTINGS MENU”.

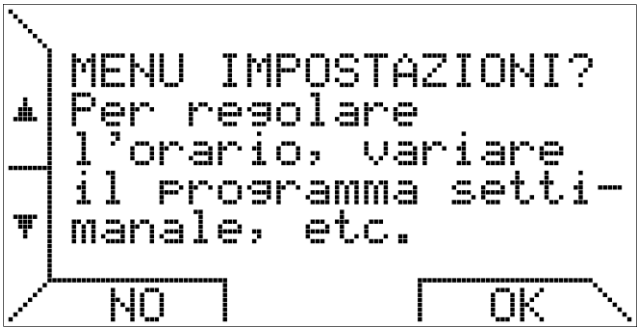

This sub-menu, described in a paragraph below, is dedicated to the "local" parameters of the remote control panel, such as current time, temperature control temperatures and weekly program.

Press the ▼ key again to go to the maximum power settings:

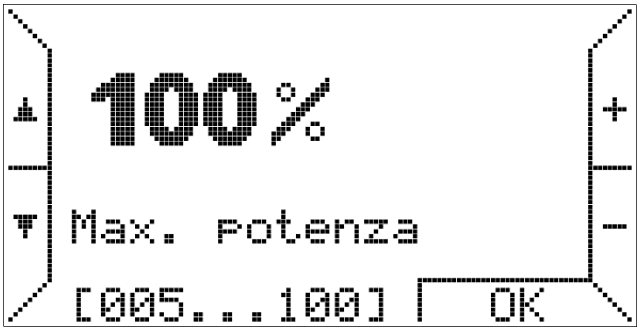

use it to limit the power level required by the remote control panel from the hot air heaters to heat the room.
For further details, see the next paragraph, in particular the description of the sub menu "Temperature control".

Instead, the next screen suggests the sub menu "PARAMETER MENU".

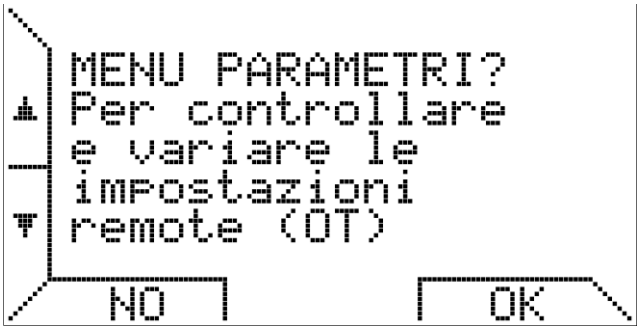

This sub menu, also described in a dedicated paragraph, allows you to see the parameters relating to the heaters and allows access to advanced functions, such as the management of "transparent parameters" (TSP) and unlocking.

If you do not enter the sub menu and you press ▼ again, the control panel of the heating system is displayed.

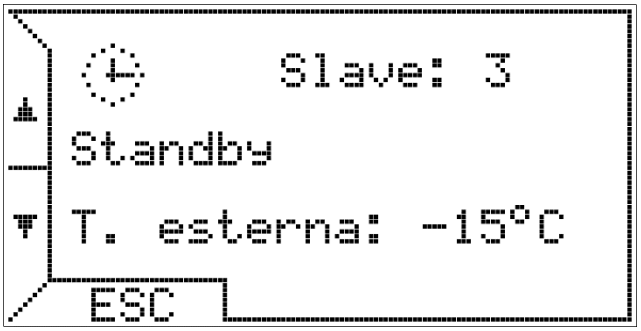

On the first line are the icons that show the status of the temperature control and of the heaters and, on the side, the number of heaters (that is "*slave*" control boards) connected; at the centre is further information on the status of the heaters and on any faults (if present); on the third line, if available, is the external temperature or any errors relating to the room temperature control.

Note that, unlike the other menu pages, this one features a frame as it is a fixed display.

The options displayed previously, in fact, wait for a selection on part of the user for 20 seconds, after which the display goes back to a "normal" view which depends only on the temperature control mode selected (manual, automatic, summer, off).
In this case, however, until the user presses ESC or changes the menu page with the keys ▼ and ▲, the remote control panel will continue to show the control panel with the relative information.

The last page of the menu, which is always accessed via the ▼ key, suggests the activation of the automatic mode.

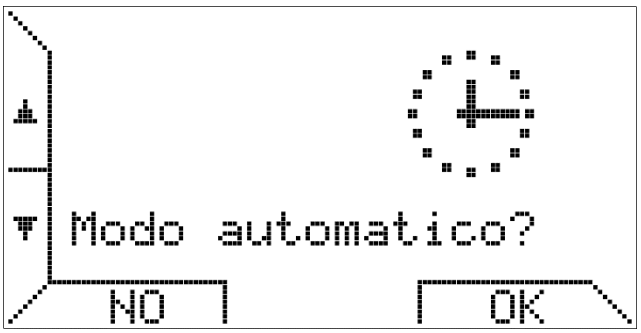

Note that, if the automatic mode is already active, it is the same if you press NO or OK.

Remote control panel management

Settings Menu:

The sub-menu described in this section allows the user to manage the room thermal regulation, including the weekly program executed by the remote control panel.

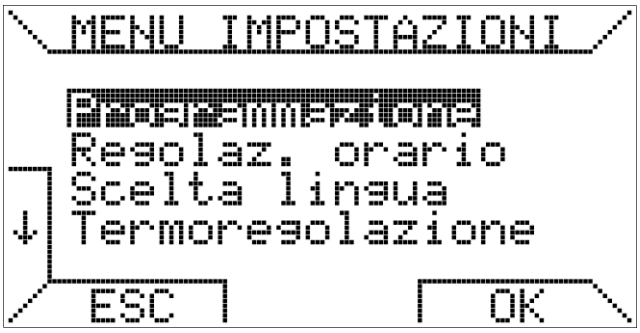

The first page of the sub menu, in fact, suggests "programming", which is displayed highlighted. By choosing this option and pressing the OK button, you enter another sub menu dedicated to the weekly program.

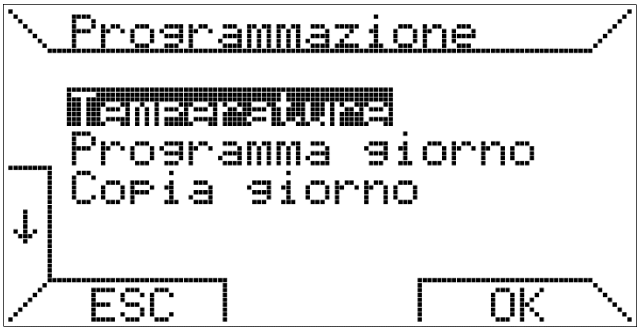

by choosing the item temperatures, you enter the screen where T0, T1, T2 and T3 can be set.

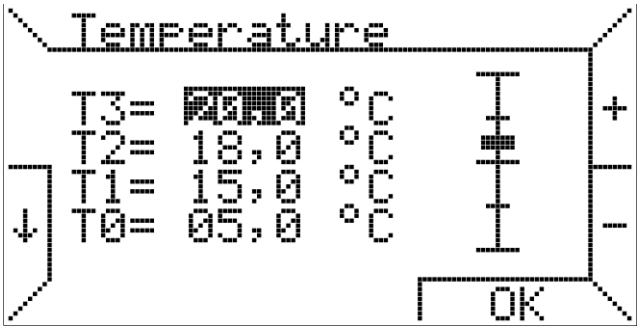

To select the temperatures you want to change, use the keys ↓ and ↑, whereas the keys + and – are used to change the value.
A graduated bar, on the right, shows the relative position of the current value compared to the minimum (1°C) and maximum (30°C) values which can correspond to the room temperature value.
Besides, in order to follow the programming logic which envisages linking the highest temperature to T3 and the lowest temperature to T0, the remote control panel observes the following restriction: “T0 ≤ T1 ≤ T2 ≤ T3” and it automatically resizes accordingly all the temperatures entered by the user.

Instead, by selecting the item "Daily program" in the sub menu "Programming", the following screen will appear.

The day to be programmed will be highlighted and it can be changed by pressing the + and - keys, while below the corresponding daily program is shown as a reminder.
Supposing you want to program "Monday", by pressing OK you enter the programming of the time slots.
The slots are programmed in three steps: start, desired temperature and end.

In the first step, enter the starting time using the keys + ad -, at intervals of at least 15 minutes, and confirm by pressing OK.

If, instead, you want to leave the programming of the selected day and change day, simply press ESC.

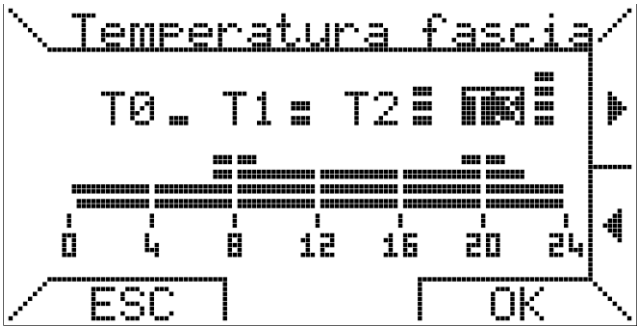

Then select which of the four temperatures you want to associate to this slot, by moving on the screen using the keys ► and ◄ to select and press OK to confirm or ESC to change the starting time

In the last step, select the ending time of the slot and confirm with OK.

This time cannot be before the starting time of the slot; by selecting two values that coincide for the start and end, the program will not be changed.

The last item of the programming menu allows you to copy the program from one day to another.

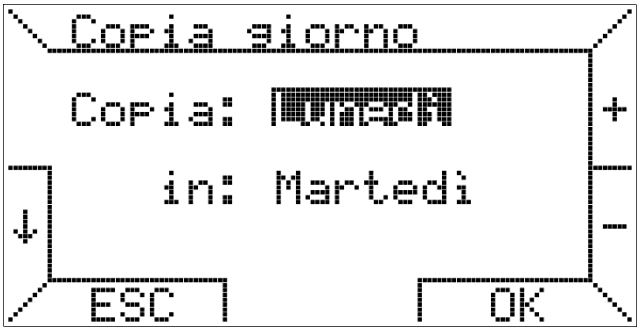

Select the source day at the top and the destination at the bottom; it is possible to use a programmed day for the whole week in order to use the same program every day: to do this simply select as a destination the item "ALL". Once you have pressed the OK key, a message will confirm the copying of the program.

having completed the description of the "Programming" menu, let us go back to describe the main sub menu, subject of this paragraph.
The second item of the "SETTINGS MENU" allows to set the current day of the week and time.

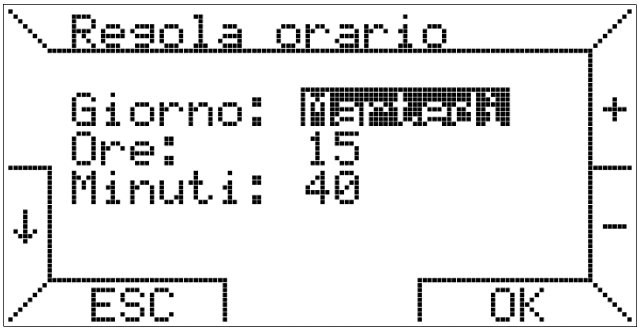

Like on the other menu pages, select using the keys ↓ and ↑, while the keys + and – allow you to change the value. It is also necessary to confirm by pressing the OK key for the changes to take effect.

Another possible setting is the choice of the language for the menu and, in general, for all texts displayed by the remote control panel.

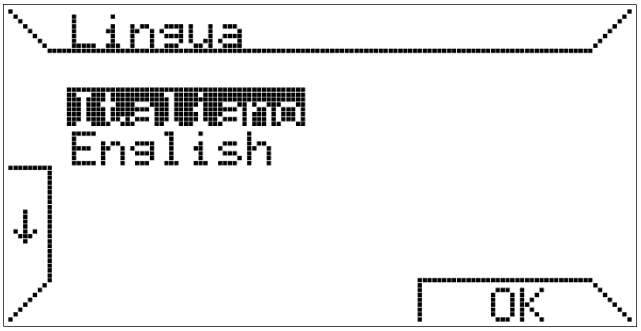

As explained above, this setting is required when starting the remote control panel for the first time and after resetting it; after, it can be changed at will.

The last item of the "SETTINGS MENU" concerns the temperature control mode used to manage room comfort.

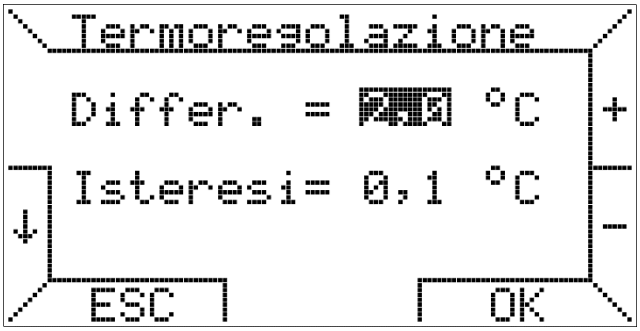

On this screen it is possible to set the temperature differential, which can vary between 0.2°C and 5.0°C (default value: 2.0°C).
Given **d** the thermal differential, **Max** the maximum percentage that has just been described and **Ti** and **Ta**, respectively, the ambient temperature set and measured, the request percentage **P** is calculated as follows:

if **Ta ≤ Ti - d** then **P = Max**

if **Ti – d < Ta < Ti** then **P = (Max / d) x (Ti – Ta)**

if **Ta ≥ Ti** then **P = 0**

Example 1 Set:
Ti = 20.0ºC
Max = 100%
d = 0.5ºC
If Ta ≤ 19,5ºC then P = 100%;
if 19.5ºC < Ta < 20.0ºC then P = (100 / 0.5) x (20 – Ta) %;
finally, if Ta ≥ 20ºC then P = 0.

On the same page it is possible to enter the hysteresis value (asymmetric) in order to prevent, in some cases, frequent re-ignitions of the heaters for short intervals. The hysteresis can vary in steps of 0.1°C between 0.1°C and 50% of the set differential value (rounded down to the tenth of a degree Celsius). Once the set value Ti has been reached, the remote control panel turns the heaters off: they will be turned on again only if the room temperature drops to Ti - hysteresis, that is the set temperature value minus the hysteresis. The default hysteresis value is 0.1°C; in this case the effect is void because the hysteresis is equal to the resolution of the temperature measured by the remote control panel, therefore it is re-ignited as soon as the room temperature is lower than the set value by a tenth of a degree.

Example 2 Set:
Ti = 20.0ºC
Max = 100%
d = 0.9ºC
hysteresis = 0.4ºC
(hysteresis can vary between 0.1ºC and diff / 2 = 0.4ºC)
When Ta ≥ 20ºC, then P = 0, and the hot air heaters switch off.
The heaters switch back on if Ta ≤ (Ti – hysteresis) = 19,6ºC; particularly if 19,1ºC < Ta ≤ 19,6ºC then P = (100/0,9) x (20 – Ta) %, while if Ta ≤ 19,1ºC then P = 100%.

Parameters menu

Another important main sub menu is the one that allows you to remotely manage the operating parameters of the air heaters.
It is possible to scroll through the various items using the keys ↓ and ↑: in this case the selection menu covers two pages and it goes from one to the other automatically by selecting the items at the bottom (or at the top, to go back to the previous page).

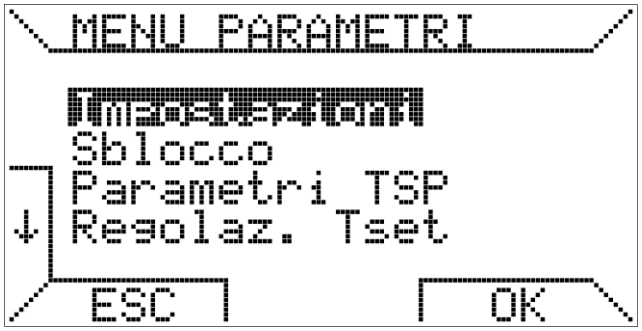

The first item, very important, allows to display and set the remote parameters of the system.
Press OK to activate the first parameter page.

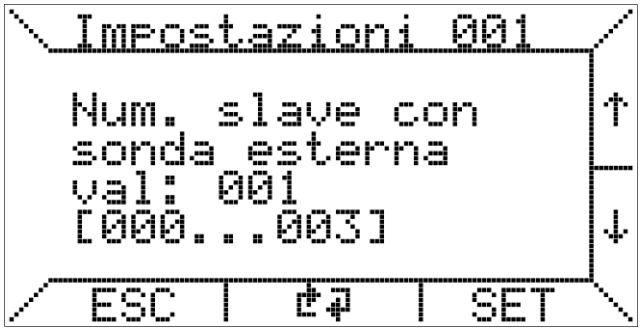

From this page, shown above, it is possible to go on to the others by pressing the keys ↓ and ↑.

To change a parameter, go to the settings page involved (with the keys ↑ and ↓) and press SET, then enter with the keys + and -, on the page that will appear, the value chosen between the minimum and maximum, shown in brackets.

The second item of the "PARAMETER MENU", instead, allows you to use the unlocking command.

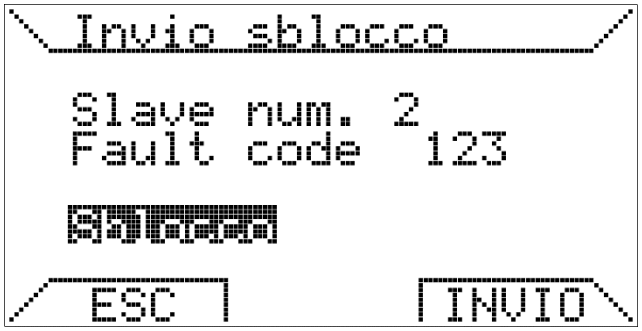

As shown on the screen above, if a hot air heater is blocked, it is possible to send a request for remote unlocking, by selecting the control "unlock" and pressing ENTER.

Since it is a safety function, the actual unlocking of the hot air heater can occur only with the consent of the safety logic of the control board.
Also note that, if the remote unlock is enabled, in case a heater gets locked, a "short cut" appears on the display in normal operation (automatic, manual, etc.); the short cut can be selected by means of the centre transparent key, to allow the user to rapidly reach this page without going through all the pages of the sub menus.

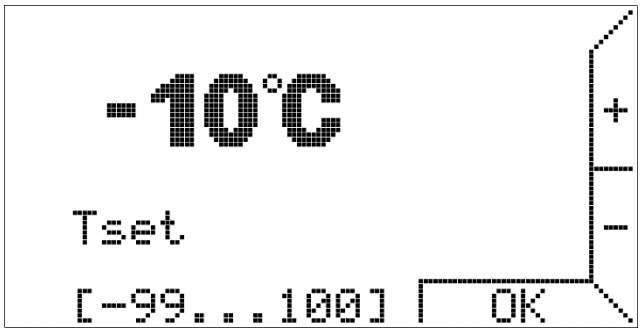

The fourth menu item "Tset Adjusting" allows entering the temperature value Tset equivalent to the minimum outdoor temperature envisaged. This function is supported by the control card and should be used if the system is equipped with an external temperature probe. This parameter influences the value of the final power percentage and allows adjustment of climate type.

Internal power reserve and use of the batteries

The remote control panel is equipped with an internal power reserve able to come into action in the event of a power failure for a few hours, so that the user can avoid having to reset the current time, the temperatures relating to the room and the weekly program.
However, the exhaustion time of the power reserve varies depending on the humidity and room temperature, as well as the ageing of the electronic components.
For the reserve to be completely operational, it is necessary for the remote control panel to be correctly and continuously fed for at least a couple of days.
Be reminded that, when power (and serial communication) is restored, the parameters stored by the control board of the slave connected to the remote control panel are loaded.
If frequent and/or prolonged interruptions of power are expected, it is possible to avoid the loss of data of the remote control panel by installing in the support base 2 AAA alkaline batteries LR03 1.5V, making sure to observe the polarity.
In this way, the additional power reserve, consisting of new batteries, can store the data for more than a year in the absence of power.
Do not leave the batteries inside the remote control panel for a long time during normal operation (presence of power supply), to avoid possible leakage of liquids that could damage the remote control panel.
Finally, note that no indications on the presence or state of charge of the batteries are available.

Warnings on the backlight:

The backlight of the display is drawn from the power reserve described in the previous paragraph. It is therefore possible that, in case of a newly connected remote control panel, the brightness is minimal or absent because of the insufficient internal charge: so not worry as just a few hours of connection are sufficient to make the backlight efficient.
It is possible, if you want, to overcome this temporary lack of backlighting by installing the alkaline batteries, observing the polarities and following the instructions in the previous paragraph.

Connection to hot air heater board:

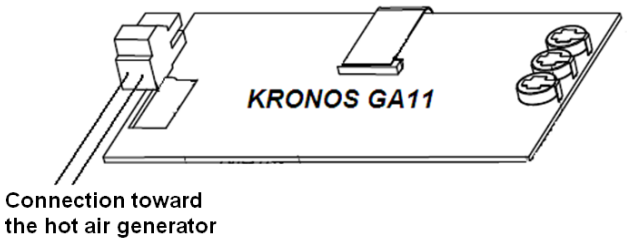

Safety recommendations for the installation

Observe the applicable national and European standards (e.g. EN60335-1/prEN50165) on electrical safety.
Before starting the device, check the cables; incorrect wiring may damage the devices and compromise the safety of the system.
Enable and disable the control system only when the power supply has been disconnected.
Avoid exposing the system to dripping water.

Wall-mounting of the environment unit:

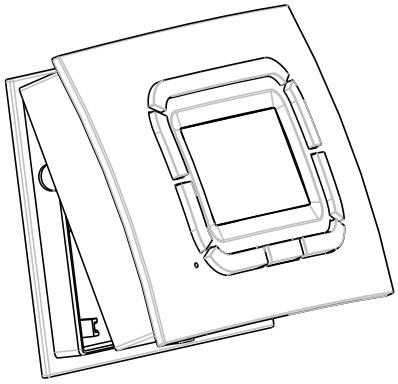

To mount the base on a wall it is first of all necessary to disassemble the front panel, containing the electronic board for the user interface, lightly pressing the "push" button situated on the bottom part of the unit, and turning the front panel to completely remove it.

For the fastening, it is possible to use several eye-bolts provided on the bottom of the base for the most common centre distance of civil plants. Once the base has been secured, it is possible to proceed with the wiring of the electronic board of the unit using the dedicated terminal board and without having to worry about the polarity (the two conductors can be exchanged).
It is recommended the use of a two-core cable (for example H03RR-F or H03VV-F) having cross- section between 0.5 mm^2 and 2.5 mm^2 and maximum length 50m; be reminded that the resistance of each conductor must not exceed 5 Ω. In premises with particularly intense electromagnetic disturbances it is recommended to use a screened two-core cable.
Having completed the wiring, the front panel must be reassembled onto the base using the upper hooks and turning it downwards until the lower hooks click.

Unlocking function:

If a hot air heater is locked, it is possible to send a request for remote unlocking, by selecting the control "unlock" and pressing ENTER; check the figure below.

Since it is a safety function, the actual unlocking of the hot air heater can occur only with the consent of the safety logic of the control board.

Note that, in the event of locking a "short cut" will appear on the display in normal operation (automatic, manual, etc.); the short cut can be selected by means of the central transparent key to allow the user to rapidly reach this page without going through all the pages of the sub menus.

CONTROLS

BURNER RESTORE PUSHBUTTON (RESET):
Placed both on the appliance (multifunctional electronic board, see figure below) and on the remote control panel (see paragraph "**REMOTE CONTROL PANEL**", in the "Parameters Menu" section), it has the function to restore the appliance operation after one failed start of the burner.

⚠ **CAUTION!!!**
Do not use screwdrivers or sharp tools to reset the multifunctional board.

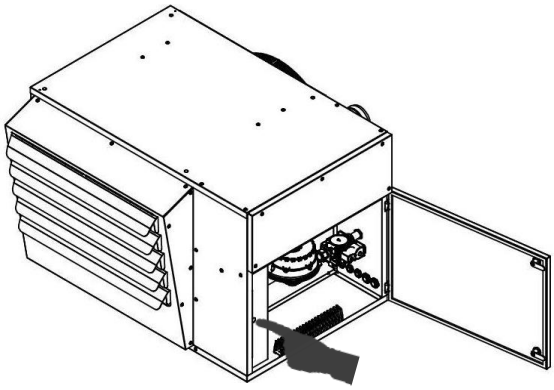

LIMIT THERMOSTAT RESTORE PUSHBUTTON (RESET):
Placed both on the appliance (multifunctional electronic board, see figure above) and on the remote control panel (see paragraph "**REMOTE CONTROL PANEL**", in the "Parameters Menu") section, it has the function to restore the appliance operation after blocking caused by overtemperature.

REMOTE CONTROL PANEL:
It has the function of managing the appliance, see the following paragraph.

⚠ **CAUTION!!!**
Before restoring any device, the problem that has triggered the safety protection should be detected and solved. In case of doubt, please contact the closest Authorized Assistance Centre, which will provide you with the necessary technical assistance.

MULTIFUNCTION LED AND ALARM CODES

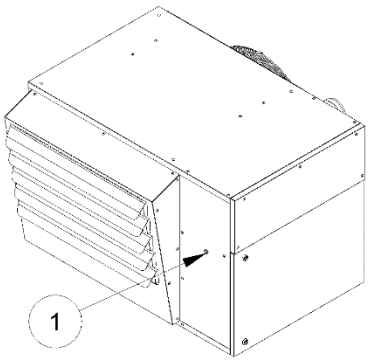

1. Multifunctional led

The equipment is able to signal via the multicoloured LED its operating conditions or the presence of the main anomalies. The following figure displays the possible combination of colours, shown by the LED.

V					V					V	Stand-by
V		V		V		V		V		V	Pre-ventilation
A	A	A	A	A	A	A	A	A	A	A	Starting
V	V	A	V	V	A	V	V	A	V	V	Reduced speed at start-up
V	V	V	V	V	V	V	V	V	V	V	Speed
A	R	A	R	A	R	A	R	A	R	A	Opening of fire damper contact STF
R	R	R	R	R	R	R	R	R	R	R	Interruption because not turned on
R	R	A	R	R	A	R	R	A	R	R	Stoppage due to overtemperature (LIMIT)
A		A		A		A		A		A	Presence of parasitic flame / temperature probe error (SR)

LEGEND:

V	Green LED
A	Orange LED
R	Red LED

The table lists all alarm code possibly displayed on the remote control panel:

Code	Description
F001	Internal fault (contact technical assistance)
F002	
F003	
F004	
F005	
F007	
F006	Exceeded maximum number of unlocks allowed in 15 minutes (5 attempts)
F010	Interruption because not turned on
F017	General interruption (may be displayed when the device is turned on for the first time)
F019	Interruption caused by overtemperature (exceeded manually resettable temperature limit TL)
F025	Error on the temperature adjusting probe SR
F026	
F027	
F060	Presence of parasite flame warning
F081	Internal communication error (contact technical assistance)
F082	Outdoor temperature probe faulty
F084	DC Brushless motor ventilator not connected or faulty
F085	Feed-back error on mains frequency: FAN treated air motor not connected or faulty
F086	STF contact of the fire damper open
F087	Exceeded automatically resettable temperature limit TOFF

ASSISTANCE INSTRUCTIONS

Interventions on the hot air heaters must be performed by qualified technical personnel. To know which Authorized Assistance Centre is nearest to you, contact the Agency that sold the unit, which will point out the one closest to the installation site.

In order to ensure that the machine works properly, some basic parameters should be checked. Switch on the appliance and **make sure the fan unit starts operating about 30 seconds after the burner ignition.**

While the warm air heater is normally working (after approx. 20 minutes of uninterrupted working), perform the following operations:

- Make sure the horizontal and vertical wings have opened correctly.
- Check for possible fuel leaks.
- Check the pressure of the gas upstream of the solenoid valve.
- Check the correct fuel flow rate via the meter.
- Perform an analysis of the fuel.
- On the remote control panel, lower the set-point to a value lower than the ambient temperature and make sure that only the burner turns off and that the fan unit does not turn off at the same time.
- check that the engine electric absorption value does not exceed the value specified in the plate
- Make sure the fan works for about 2÷3 more minutes after the burner has gone out, before it stops.
- Check that the air flow is equal to the nominal air flow specified in the TECHNICAL DATA paragraph.
- Make sure the condensate discharge system works.
- Check that the condensate discharge syphon properly works.

⚠ **CAUTION!!!**

All the inspections mentioned above must be carried out in all operating conditions (max and min).

BURNER BLOWER ROTATION PARAMETERS

The appliance is adjusted at the manufacturer's with the rotation speed shown in the following table:

TSP PARAMETER	TYPE 0				TYPE 1-7				TYPE 2-8				TYPE 3-9			
	[rpm]				[rpm]				[rpm]				[rpm]			
	G20	G25	G31	G27	G20	G25	G31	G27	G20	G25	G31	G27	G20	G25	G31	G27
MAX SPEED	3.075				5.175				6.525				4.500			
MIN SPEED	1.425				1.950				2.325				1.800			
IGNITION SPEED	2.025				3.075				3.900				2.625			
TSP PARAMETER	**TYPE 4-10**				**TYPE 5-11**				**TYPE 6-12**				**-**			
	[rpm]				[rpm]				[rpm]				-			
	G20	G25	G31	G27	G20	G25	G31	G27	G20	G25	G31	G27	-	-	-	-
MAX SPEED	5.025				4.800				6.150				-			
MIN SPEED	1.725				1.950				2.325				-			
IGNITION SPEED	3.000				2.850				2.850				-			

POSITIONING OF THE ELECTRODES

For a correct start-up and operation of the appliance, it is important to check the correct position of the ignition and ionisation electrodes.

TYPE 0- 2-3-4-8-9-10

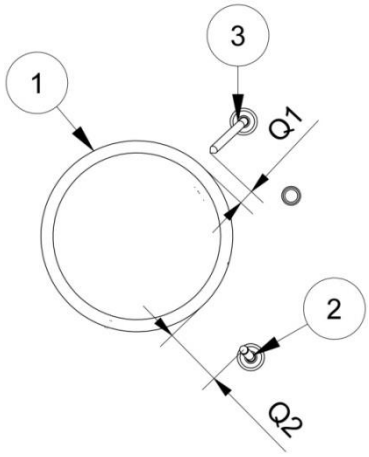

TYPE 1-5-6-7-11-12

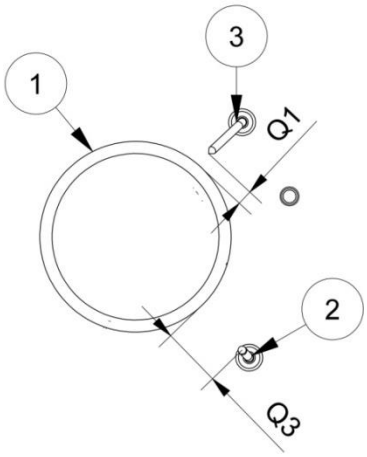

1. Burner
2. Ionising electrode
3. Ignition electrodes

NOTE:

Q1. Distance between ignition electrode and burner equal to **6mm** for all models.
Q2. Distance between ignition electrode and burner equal to **28 mm** for models **0-2-3-4-8-9-10**.
Q3. Distance between ignition electrode and burner equal to **22 mm** for models **1-5-6-7-11-12**.

COMBUSTION GAS PRESSURE CHECK

The appliance is configured with modulating thermal capacity, and the pressure of the gas to the burner is managed directly by the electronics on board. The correct operating pressures must be checked as follows:

Gas supply pressure inspection and measurement instructions:

- Enable the burner operation at maximum power, see the paragraph "**Remote Control Panel**"
- Connect the pressure gauge to the pressure intake (see following drawings);
- Check that the network gas pressure is stable and that it corresponds to the data indicated in the paragraph "**Gas categories**";
- Stop the unit and make sure that the pressure does not change.

FORBIDDEN!!!

In no case, the gas supply pressure must exceed 60 mbar. If such value is exceeded, irreparable damage to the gas solenoid valve unit will occur.

Type 1 - 2 - 3 – 4 – 7 – 8 – 9 - 10

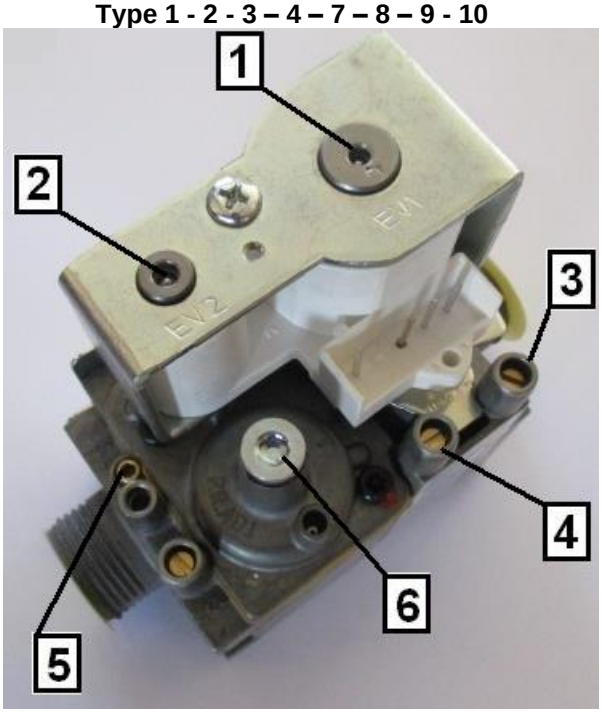

Type 5 – 6 – 11 – 12

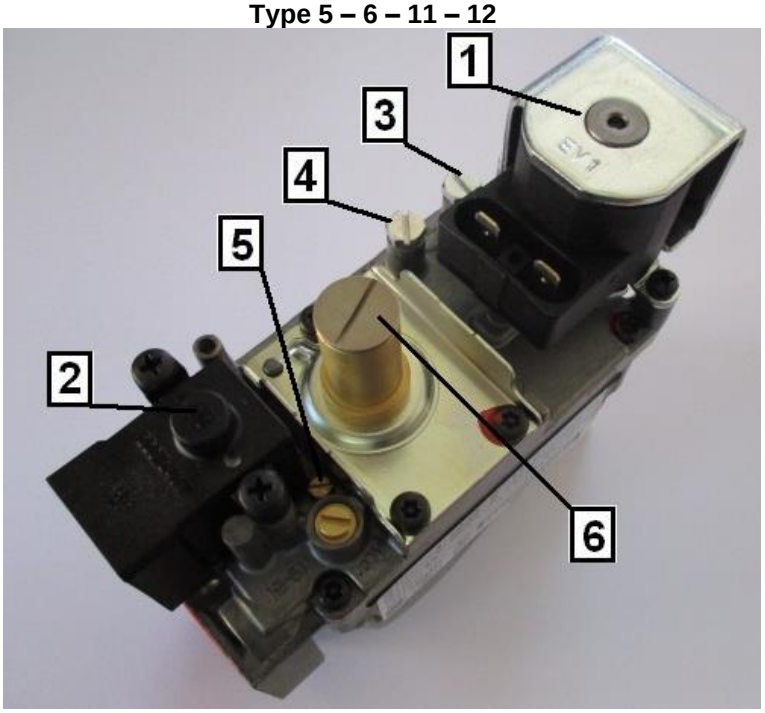

1. Spool on-off EV1
2. Spool on-off EV2
3. **Input pressure intake**
4. Output pressure intake
5. **Pressure adjustment screw at the MAX power**
6. **Pressure adjustment screw at the MIN power**

CAUTION!!!

TYPE 0-1-2-3-4-7-8-9-10, for the adjustment of the pressure to the MAX level, use a 2.5 mm hex male wrench and rotate the screw clockwise to reduce the gas flow.
For the adjustment of the pressure to the MIN level, use a 4 mm hex male wrench and rotate counter-clockwise the screw the reduce the gas flow.

CAUTION!!!

TYPE 5-6-11-12, for the adjustment of the pressure at the MAX power, use a small slotted screwdriver and rotate clockwise to reduce the gas flow.
For the adjustment of the pressure to the MIN level, use a medium crosshead screwdriver and rotate the screw anti-clockwise to reduce the gas flow.

COMBUSTION ANALYSIS

In order to analyse the appliance combustion, samples of combustion products should be taken using a set-up catch basin.

For an optimal operation of the appliance, check that the values of carbon dioxide (CO_2) identified in the fumes are close to the ones contained in the following chart.

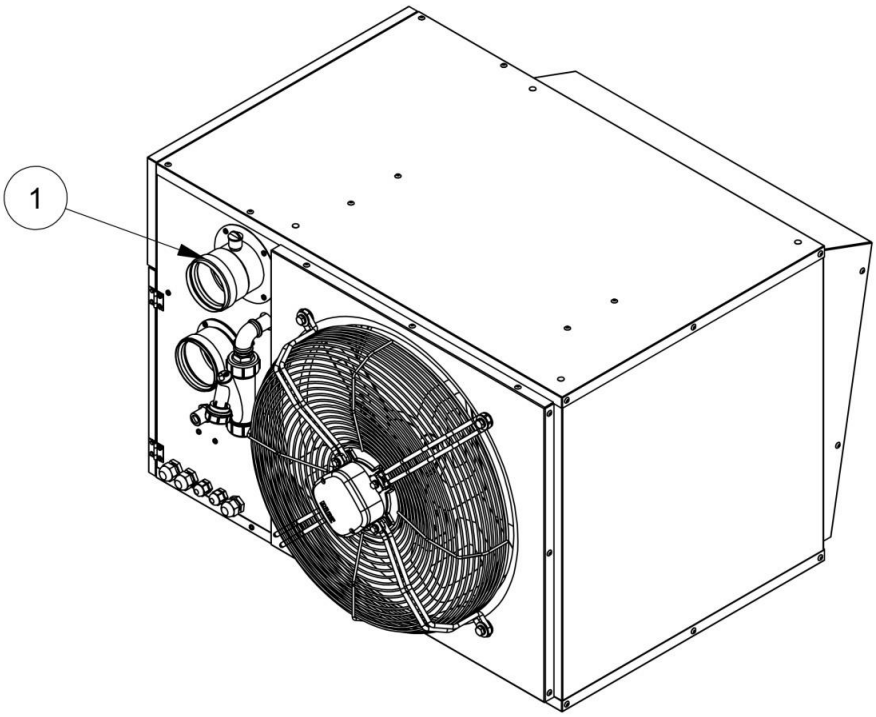

1. Combustion products probe catch basin.

Reference chart for carbon dioxide content expressed as percentage [%] and fumes temperature [(1)] expressed degrees Celsius [°C]

COMBUSTION GAS	POWER	TYPE 0		TYPE 1-7		TYPE 2-8		TYPE 3-9	
		[%]	[°C]	[%]	[°C]	[%]	[°C]	[%]	[°C]
Methane G20	MIN	~8,8	~ 50	~8,8	~ 40	~8,8	~ 40	~8,8	~ 45
	MAX	~9,0	~ 100	~9,0	~ 95	~9,0	~ 110	~9,0	~ 95
Methane G25	MIN	~8,8	~ 50	~8,8	~ 40	~8,8	~ 40	~8,8	~ 45
	MAX	~9,0	~ 100	~9,0	~ 95	~9,0	~ 110	~9,0	~ 95
Propane G31	MIN	~9,8	~ 50	~10,2	~ 40	~10,2	~ 40	~10,2	~ 45
	MAX	~10,1	~ 100	~10,4	~ 95	~10,4	~ 110	~10,4	~ 95
Methane G27	MIN	~8,8	~ 50	~8,8	~ 40	~8,8	~ 40	~8,8	~ 45
	MAX	~9,0	~ 100	~9,0	~ 95	~9,0	~ 110	~9,0	~ 95
COMBUSTION GAS	POWER	TYPE 4-10		TYPE 5-11		TYPE 6-12		-	
		[%]	[°C]	[%]	[°C]	[%]	[°C]	-	-
Methane G20	MIN	~8,8	~ 40	~8,8	~ 30	~8,8	~ 35	-	-
	MAX	~9,0	~ 90	~9,0	~ 55	~9,0	~ 60	-	-
Methane G25	MIN	~8,8	~ 40	~8,8	~ 30	~8,8	~ 35	-	-
	MAX	~9,0	~ 90	~9,0	~ 55	~9,0	~ 60	-	-
Propane G31	MIN	~10,2	~ 40	~10,2	~ 30	~10,2	~ 35	-	-
	MAX	~10,4	~ 90	~10,4	~ 55	~10,4	~ 60	-	-
Methane G27	MIN	~8,8	~ 40	~8,8	~ 30	~8,8	~ 35	-	-
	MAX	~9,0	~ 90	~9,0	~ 55	~9,0	~ 60	-	-

[(1)] Referred to an ambient temperature of 15°C.

GAS CONVERSION

The appliances are supplied pre-arranged for methane H gas operation (G20). Each unit features the kit for conversion to another gas type. The conversion must be performed only by the local Technical Assistance Service or by personnel authorized by the manufacturer and it can be performed also after the thermal unit has been installed, operating as described below.

Instructions for conversion:

From METHANE GAS G20, to METHANE GAS G25 and to PROPANE GAS G31:

1. Disconnect the power supply of the hot air heater and close the gas supply interception valve;
2. Replace the gas diaphragm;
3. Re-open the gas supply interception valve and electrically feed the appliance
4. Check and adjust the gas supply pressure;
5. Perform combustion analysis and then check the values of carbon dioxide in the exhaust fumes;
6. Replace the adhesive label indicating the arrangement;
7. Fill out the chart in the instructions manual containing the data relating to conversion.

Gas diaphragm replacement:

The appliances are provided with a gas diaphragm installed as shown in the following figure, proceed to the replacement of the diaphragm with the desired gas kit:

TYPE 0-1-2-3-4-7-8-9-10

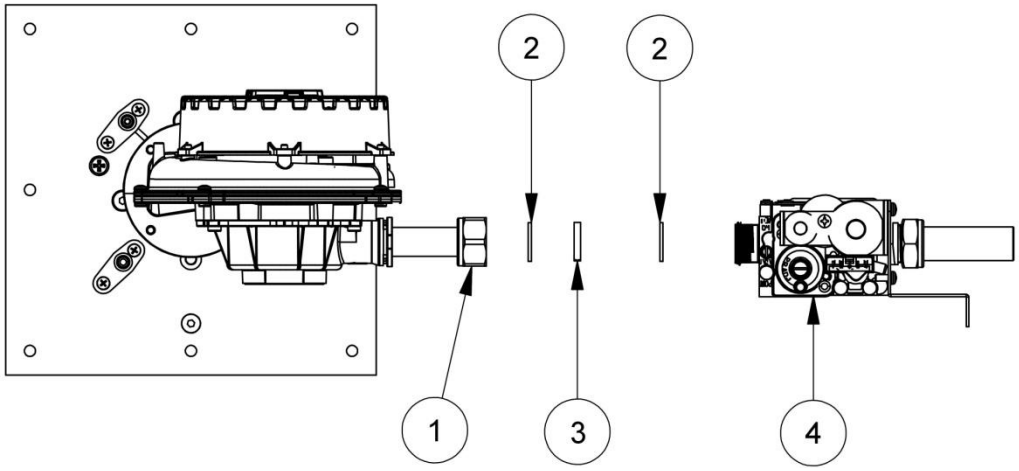

TYPE 5-6-11-12

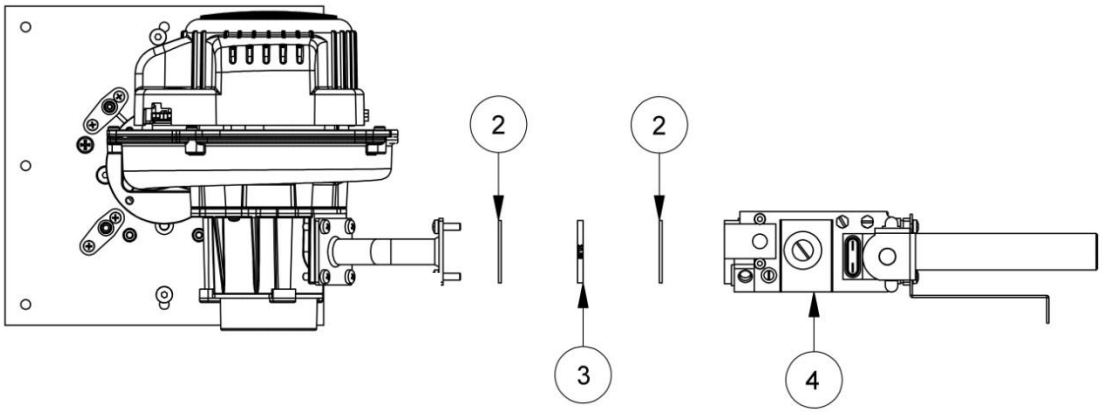

1. Cap CH-30.
2. Gasket.
3. Gas diaphragm.
4. Gas Solenoid valve.

Diaphragms diameters chart for the various fuels:

COMBUSTION GAS	TYPE 0	TYPE 1-7	TYPE 2-8	TYPE 3-9	TYPE 4-10	TYPE 5-11	TYPE 6-12
	[mm]	[mm]	[mm]	[mm]	[mm]	[mm]	[mm]
Methane G20 KIT pre-assembled	∅ 5,00	Ø 4,90	Ø 5,00	Ø 8,95	Ø 8,95	Ø 10,75	Ø 10,50
Methane G25 KIT supplied	∅ 5,50	Ø 5,30	Ø 5,50	Ø 15,00	Ø 15,00	Ø 12,40	Ø 12,10
Propane G31 KIT supplied	∅ 3,90	Ø 3,80	Ø 3,85	Ø 6,30	Ø 6,30	Ø 8,20	Ø 8,10
Methane G27 KIT supplied	∅ 5,80	∅ 5,80	∅ 5,80	∅ 15,00	∅ 15,00	∅ 12,40	∅ 12,10

Replacement of self-adhesive label gas conversion:

The gas transformation kit includes a self-adhesive label which, once the transformation has been achieved, shall be applied onto the label previously applied at the factory. The new label shall completely cover the previous one, so that no doubts can arise about equipment prearrangement.

Conversion date	
Type of conversion gas	
Performed by	

MAINTENANCE INSTRUCTIONS

⚠ **WARNING**

Repairs or maintenance must be performed by the Technical Assistance Service or by qualified personnel.

Prior to any maintenance / check intervention, disconnect the unit from the general electric power supply.

In order for the machine to properly work and be maintained, we suggest performing the regular cleaning and maintenance operations.

These types of intervention must be carried out by specialized and qualified personnel while the unit is cold and disconnected from the electrical and fuel supplies.

We suggest using protection gloves.

All the maintenance/cleaning operations requiring the use of ladder or of other means, should be performed with appropriate and completely safe systems.

Regularly check that all the screws used to assembly the machine are properly fixed.

⚠ **WARNING**

For appliances installed close to the sea or in harsh conditions, the maintenance intervals have to be halved.

For appliances near areas or in particularly harsh conditions, the maintenance intervals should be more frequent and, however, suitable for the requirements.

HEAT EXCHANGER INSPECTION

The inspection and cleaning of the heat exchanger must be carried out by qualified personnel and comply with precise standards on the matter. In general, it is recommended to perform inspection at least once a year, at the beginning of every winter. For such operation, perform the following operations:

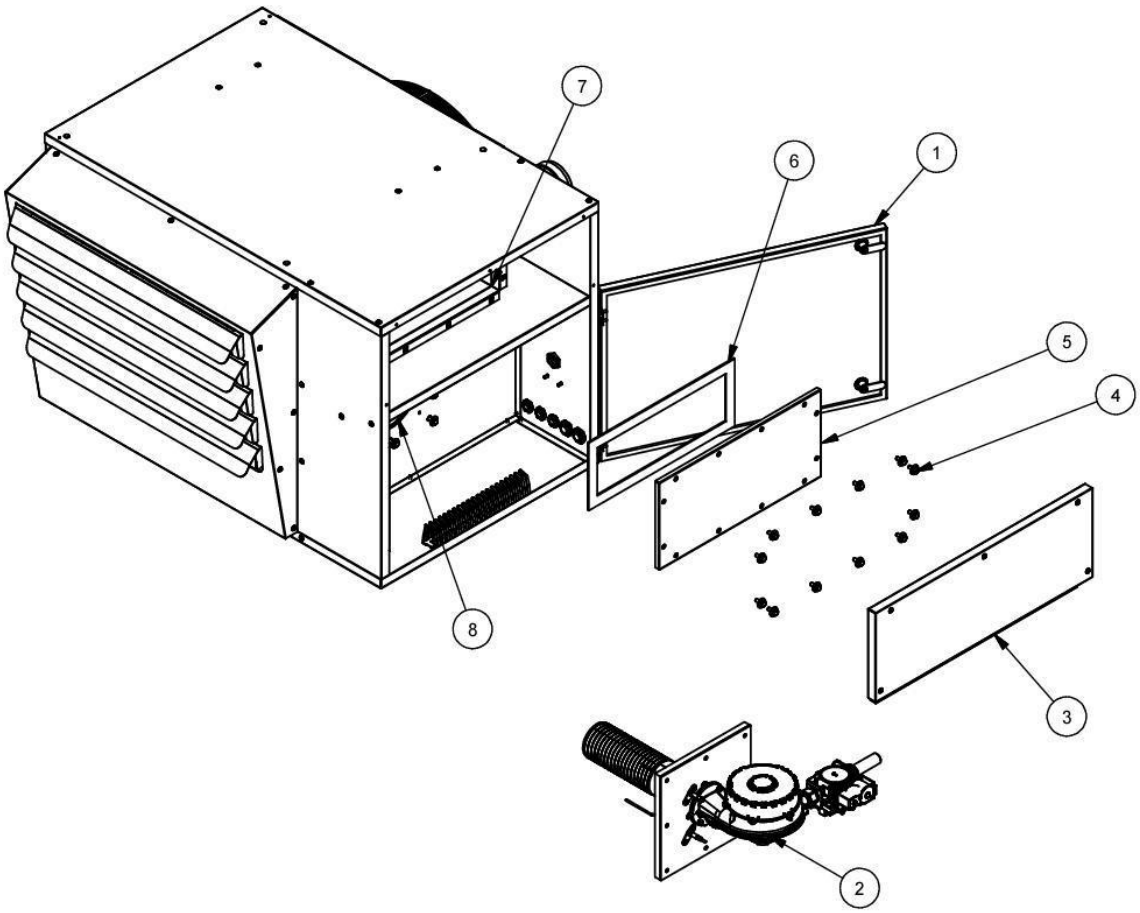

- Remove the panel **3**;
- Remove the inspection hatch of the tube heat exchanger **5**, making sure not to ruin the gasket **6**;
- Through the fumes manifold **7**, inspect the exchange elements; clean and remove the residues, if necessary, using compressed air and/or chemical systems;
- Open the hatch **1**.
- Disassemble the premixed burner unit **2.** Warning! Before disassembling the burner unit, it is necessary to disconnect the gas solenoid valve unit;
- Through the opening **8**, inspect the combustion chamber and if necessary remove any deposits using a vacuum cleaner;
- Reassemble all the pieces, considering especially the tightness and replacing the gaskets, if necessary.

CLEANING THE CONDENSATE DRAIN SYSTEM

Visually check where possible or with suitable tools the condition of the ducts.

Clean the syphon, checking the condition of the connections. Make sure that there are no traces of metal residues. In case of formation of metal residues, increase the number of revisions.

After the cleaning of the syphon, before re-starting the appliance fill up the syphon with water and close the appropriate tap.

CLEANING OF THE BURNER

The cleaning of the burner must be carried out by removing it from its housing and removing any crusting, which may have settled down on the tube, using **exclusively** compressed air. Damaged gaskets must be absolutely replaced.

CLEANING OF ELECTRODES

For a correct ignition and operation of the appliance, it is important to clean the ignition and ionisation electrodes removing any possible crusting and/or oxidation.

CLEANING THE ELECTRIC FAN

The cleaning of the fan consists of the mechanical removal of dust or foreign bodies which have got deposited on the impeller, motor and safety grid.

CLEANING OF SMOKE EXHAUST AND COMBURENT AIR SUCTION DUCTS

To clean the fume exhaust and combustion air suction ducts, remove mechanically the dust or any foreign matter deposited.

CLEANING THE EXTERNAL PANELS

This cleaning should only be carried out with damp cloths with soap and water. In case of stains which does not get easily away, moisten the cloth with a mixture of 50% water and denaturated alcohol or specific products. After cleaning, dry the surfaces carefully.

FORBIDDEN!!!
Do not use sponges soaked in abrasive products or powder detergents.

STRUCTURE MAINTENANCE

It is recommended to check the following points:

- check that all the screws used to assemble the machine are properly fixed.
- check the condition of the components, constituting the structure. If any oxidation is present, treat with proper paints to stop the process.

⚠ An incorrect fixing of the screws may cause annoying noise or irregular vibrations.

SPACE FOR NOTES