Mobile Warm Air Heater Range

From Flexiheat UK

Tel- 01202 822221

www.flexiheatuk.com

sales@flexiheatuk.com

Mobile Warm Air Heaters – Oil or Gas Fired

From ***25 to 200 kW***

Mobile Warm Air Heaters
M25 – M100

Technische Daten / Technical data / Caracteristiques techniques		**M25**	**M50**	**M70**	**M100**
Brennstoff / Fuel / Combustibles		Heizöl EL / Fuel oil EL / Fuel EL			
Nennwärmebelastung / Rated heat load / Puissance calorifiques techniques	KW	25	51	71	100
Nennwärmeleistung / Nominal heating efficiency / Puissance calorifique	KW	22	46	64	90
Nennluftvolumenstrom / Nominal air delivery / Débit d'air nominal (20°C)	m³/h	870	2.600	3.700	4.200
Pressung extern / Pressure external / Pression extérieure	Pa	80	170	180	150
Temperaturerhöhung (Δt) / Rise in temperature (Δt) / Température difference (Δt)	Kelvin	78	54	56	70
Schalldruckpegel / Sound pressure level / Pression acoustique	dB(A)	67	72	69	71
Ölverbrauch / Oil consumption / Consommation oil	kg/h	2,1	4,3	6,0	8,4
Stromverbrauch / Electrical power consumption / Consommation électrique	kW	0,376	0,69	1,47	1,38
Elektroanschluß / Electrical connection / Alimentation électrique	Volt/ Ampere	230~ 1,3	230~ 4,4	230~ 6,4	230~ 6,1
Tankinhalt / Contents of the tank / Contenue du resérvoir	L	27	46	-	-
Abmessungen Breite / width / largeur Measure Tiefe / depht / profondeur Dimensions Höhe / height / hauteur	mm	520 1060 900	600 1350 1050	760 1470 1090	920 1850 1260
Abgasrohr / Flue pipe / Tuyau de cheminée Ausblasöffnung / Air outlet ∅ / Bouche de la sortie	∅ mm	100 285	130 385	180 445	180 550
Gewicht ohne Brenner / Weight without burner Poids sans brûleur	kg	62	108	134	190
Schutzart / Type of protection / Protection		IP 44			

Mobile Warm Air Heaters
M 150

Technische Daten / Technical data / Caracteristiques techniques		M 150
Nennwärmebelastung / Rated heat load / Puissance calorifiques techniques	KW	140
Nennwärmeleistung / Nominal heating efficiency / Puissance calorifique	KW	125
Luftvolumenstrom / Air delivery / Débit d'air	m³/h	7300
Nennluftvolumenstrom / Nominal air delivery / Débit d'air nominal	m³/h	5250
Temperaturerhöhung (Δt) / Rise in temperature (Δt) / Température difference (Δt)	Kelvin	50
Schalldruckpegel / Sound pressure level / Pression acoustique	dB(A)	75
Ölverbrauch / Oil consumption / Consommation électrique	kg/h	11,8
Stromverbrauch / Electrical power consumption / Consommation électrique	kW	1,38
Elektroanschluß / Electrical connection / Alimentation électrique	Volt/Hz Ampere	230~/50 6,1
Abgasrohr Ø / Flue pipe Ø / Tuyau de cheminée Ø	mm	180
Abmessungen: Breite/Tiefe/Höhe / Dimensions: width/length/heigth Dimension: largeur/Longueur/hauteur	mm	940 2320 1340
Gewicht ohne Brenner / Weight without burner / Poids sans brûleur	kg	270
Schutzart / Type of protection / Protection		IP 44

Mobile Warm Air Heaters
M 200

Technische Daten / Technical data / Caracteristiques techniques		M 200
Nennwärmebelastung / Rated heat load / Puissance calorifiques techniques	KW	188
Nennwärmeleistung / Nominal heating efficiency / Puissance calorifique	KW	173
Luftvolumenstrom / Air delivery / Débit d'air	m³/h	10.200
Nennluftvolumenstrom / Nominal air delivery / Débit d'air nominal	m³/h	7.300
Temperaturerhöhung (Δt) / Rise in temperature (Δt) / Température difference (Δt)	Kelvin	60
Schalldruckpegel / Sound pressure level / Pression acoustique	dB(A)	75
Ölverbrauch / Oil consumption / Consommation électrique	kg/h	15,8
Stromverbrauch / Electrical power consumption / Consommation électrique	kW	2,90
Elektroanschluß / Electrical connection / Alimentation électrique	Volt/Hz Ampere	230~ /50 13,5
Abgasrohr Ø / Flue pipe Ø / Tuyau de cheminée Ø	mm	180
Abmessungen: Breite/Länge/Höhe / Dimensions: width/length/heigth Dimension: largeur/Longueur/hauteur	mm	940 x 2400 x 1570
Gewicht ohne Brenner / Weight without burner / Poids sans brûleur	kg	330
Schutzart / Type of protection / Protection		IP 44

Applications for Warm Air Heaters

- **Construction site heating**
- **Events/ Marquees**
- **Frost Protection of Buildings / Produce**
- **Agriculture (Work Place/Animals)**
- **Greenhouses**
- **Construction Drying**
- **Spot Heating**
- **Crop Drying**
- **Military**
- **Basically – Any where Heat is Required !**

Approximate Heat Sizing

Building Size : Lenght (in Feet) x Breadth (in Feet) x Average Height (in Feet) x 5 Btu‘s =

Btu‘s an hour required

The is based on an oustide temperature of -5 C and to achieve 15C ,(this is a called the Delta T – which in this case is 20C)which is a comfortable working temperature for people who are moving about, so generating body heat

Change the Btu‘s required as per the following description that best fits the area you want to heat -

1. No Insulation (e.g corrugated sheet), doors frequently opened = 9 Btu‘s

2. Poor Insualtion (e.g single skin brick or block) some single glazed windows , = 6.8 Btu‘s

doors open fairly often

3. Average Insulation (e.g double skin brick or block , windows single glazed , = 5 Btu‘s

roof insulated, doors not open much

4. Good Insulation (e.g blocks plus cladding with insulation between) few or = 2.7 Btu‘s

double glazed windows,doors rarely opened

*** For Marquee‘s Please use 13.5 Btu‘s

For different temperature requirements , we have a excel spread sheet , which will calculate the requirement

IP Rating / DBA explained

First number (Protection against solid objects)	Definition	Second number (Protection against liquids)	Definition
0	No protection	0	No protection
1	Protected against solids objects over 50mm (e.g. accidental touch by hands	1	Protected against vertically falling drops of water
2	Protected against solids objects over 12mm (e.g. fingers)	2	Protected against direct sprays up to 15o from the vertical
3	Protected against solids objects over 2.5mm (e.g. tools and wires)	3	Protected against direct sprays up to 60o from the vertical
4	Protected against solids objects over 1mm (e.g. tools, wires and small wires	4	Protected against sprays from all directions - limited ingress permitted
5	Protected against dust - limited ingress (no harmful deposit)	5	Protected against low pressure jets if water from all directions - limited ingress permitted
6	Totally protected against dust	6	Protected against strong jets of water e.g. for use on shipdecks - limited ingress permitted
		7	Protected against the effects of temporary immersion between 15cm and 1m. Duration of test 30 minutes
am LABELS		8	Protected against long periods of immersion under pressure

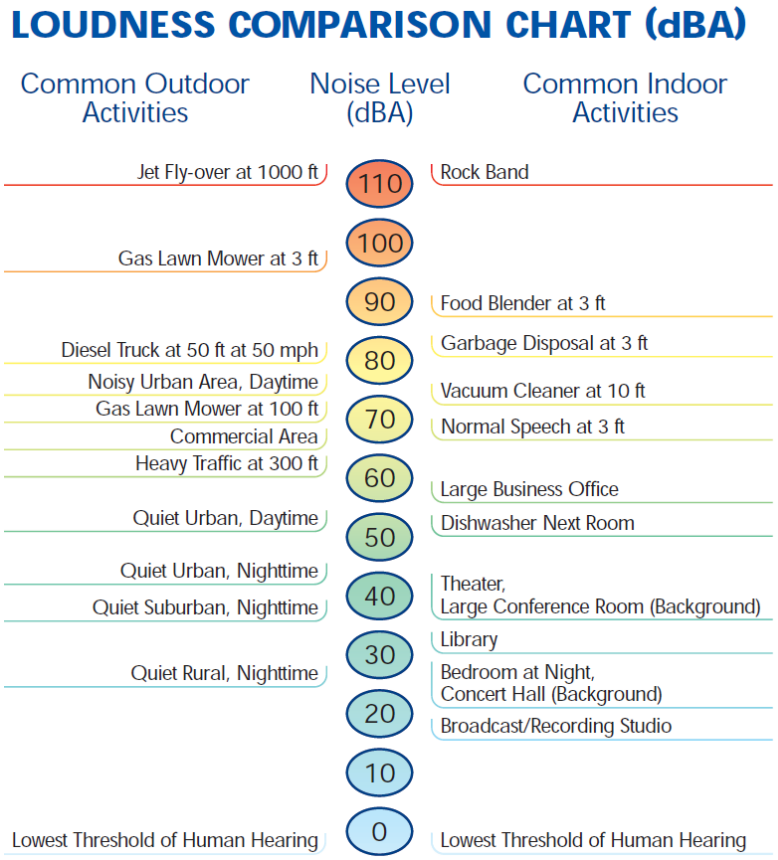

Warm Air Recirculation

When not using the models in a recirculation air operation – this must be closed in this position

When using in a recirculation mode, lift flap and connect the warm air hose to the spigot

Warm air recirculation cont.....

Control Box on the M range

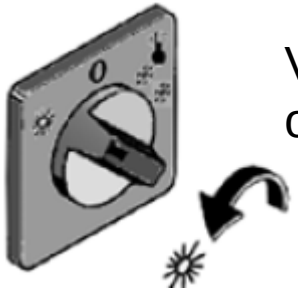

Ventilate only

Off

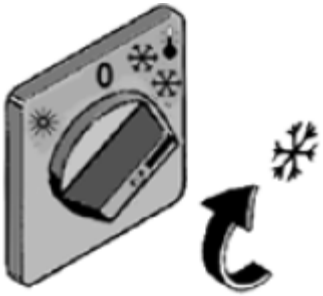

Heating **without** Room Stat.
I.E. Permanently on

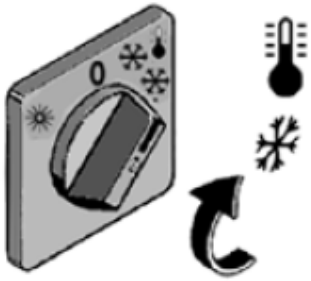

Heating **with** Room Sat.
I.E Controlled by room stat temperature setting

Pascal Explained

Mobile Heaters – Pascal (Pa) explained

Air Pressure is expressed Pascal and has been since 1971

The SI unit for pressure is the Pascal (Pa), equal to one Newton per square meter (N/m^2 or $kg \cdot m^{-1} \cdot s^{-2}$). This special name for the unit was added in 1971; before that, pressure in SI was expressed simply as N/m^2.
Mobile Heaters have the units generated air pressure normally expressed in Pa

For example a Kroll / Carrier M70 will produce 180 Pa

Everything that is attached to the end of a heater causes frictional resistance, and this depletes the amount of PA available after going through the duct or a bend in the duct etc

Pascal Explained

We have some approximate values for calculating how far a heater can blow –

For every 1 metre of duct, (it doesn't matter if it's horizontal or vertical) = 2 Pa /metre

A 90 degree bend in the duct = ca 20 Pa , Single warm air hose connector = ca 15 Pa

Minimum desired pressure at the end of a duct = ca 30 Pa

Thus a M70 heater with a straight run of (warm air) duct could do –

Heater pressure – 180 Pa

Less desired PA at the end of the duct – 30 pa , less warm air hose connector – 15 Pa = 135 Pa

= 135 Pa dived by 2 Pa per meter = 67.5 metres of straight duct

Burner for M Range

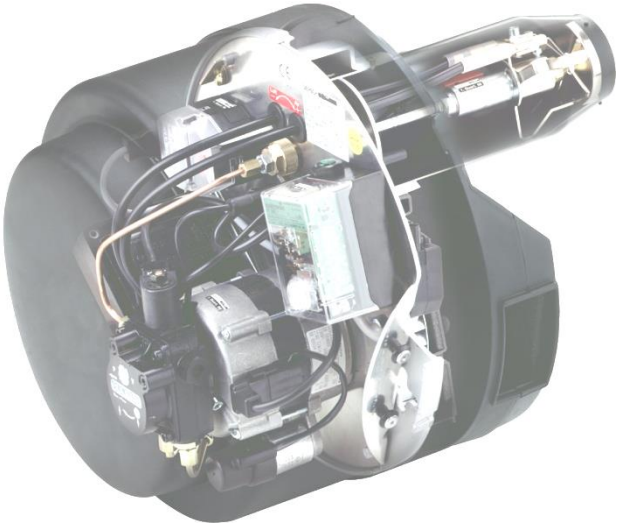

Simple Air Setting

Easy to Service

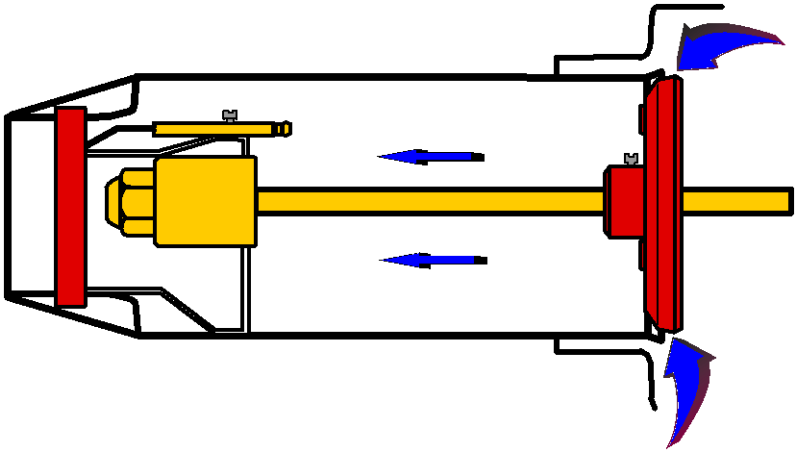

Features of the HM200/2

- High Air Pressure – 350 Pa
- Output – 173 kW or 122 kW
- Skid mounted – easy for fork lift trucks
- Can be used in a recirculation mode
- Patented stainless steel heat exchanger and combustion chamber